MAZZONI

INDUSTRIAL

2024 目录 | CATALOGUE

高压泵系列 - 电机系列 - 高压热水器 - 阀门

HIGH PRESSURE PUMPS - MOTORS - HEATERS - VALVES

MAZZONI

近年来的营业额
Last years turnover

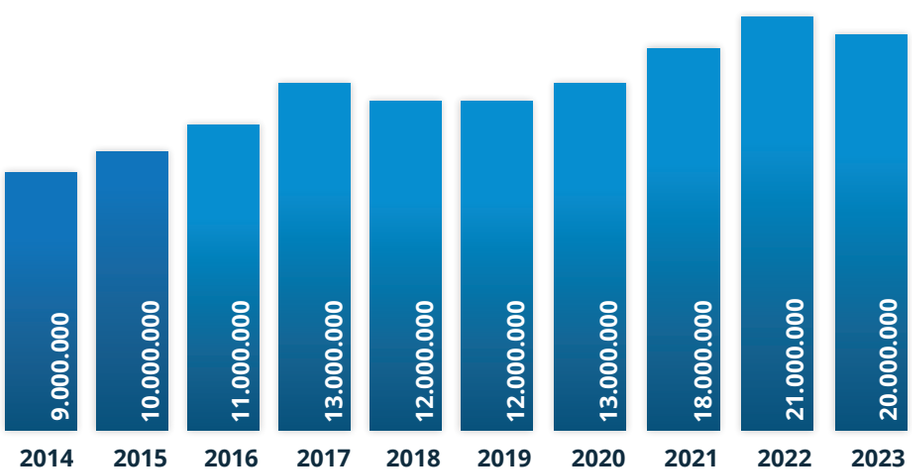

用于工业和专业领域的清洗设备

自1969年以来，Mazzoni始终为客户提供最前沿的技术和专业知识，保证其所有产品在工业和专业清洁领域的卓越性能。秉承初心，Mazzoni的主要目标是严格遵守欧盟环保政策，通过投资最先进的材料来满足客户需求

50多年前， Mazzoni只是一家占地250平方米的家庭作坊。在管理层和专业团队的不懈努力下， 如今，Mazzoni在Cavriago（Reggio Emilia）的总部占地18,000平方米，拥有包括储存部件的垂直仓库，管理半成品的自动仓库（TRASLO），以及多条整机和部件生产线的现代化工厂。

对前沿技术和尖端设备的精益求精，结合对细节和环境可持续性的极度关注，使Mazzoni在泵、部件和清洗机制造领域成为世界先驱。

Machines for Industrial and Professional Cleaning

Since 1969, Mazzoni offers its clients the highest level of technology and expertise, thus guaranteeing the best performance in the industrial and professional cleaning sector. Since the early beginning, Mazzoni's major goal has been to meet its clients' needs by investing in cutting-edge materials and complying with the requirements to minimize environmental impact.

Everything started more than 50 years ago, in a family-run and tiny craft laboratory of 250 square meters. Today, thanks to the highly qualified staff and unwavering commitment of the management, Mazzoni boasts a warehouse of 18.000 sqm. Our headquarters in Cavriago (Reggio Emilia) is equipped with the highest quality innovative technologies: a vertical warehouse for components storage, an automatic warehouse (TRASLO) for managing semi-finished products, and multiple production lines of complete machines and components.

The constant search for the highest technologies and cutting-edge equipment combined with the utmost care for details and environmental sustainability, make Mazzoni a world leader in manufacturing pumps, components, and machines.

我们的高压泵，电机和高压锅炉的设计旨在确保可靠性和耐用性。我们的技术部门不断改进产品，以达到更高的质量和性能要求。

我们的高压泵是为不同机器而设计的：高压清洗机和任何清洗系统，消防系统，防冻液泵系统，反渗透系统，雾化器喷雾器，各类船舶都适合使用Mazzoni的高压泵。

Our high pressure pumps, electric motors and high pressure boilers are designed to guarantee reliability and durability. Our technical department constantly improves products to reach ever higher levels of quality and performance.

Our pumps are designed to be installed in different machines: pressure washers and washing systems in general, fire-fighting systems, anti-freeze pumping systems, reverse osmosis systems, nebulizers, sprayers, boats, etc

产品索引
INDEX

高压泵系列
HIGH PRESSURE PUMPS

PMD SERIES 16
MMD SERIES 32
GM SERIES 50
XM SERIE 70
LM SERIES 76

电机系列
MOTORS

MEC 100 92
MEC 112 94
MEC 132 96
MEC 160 - MEC 180 98

电机和泵组
MOTOR AND PUMP UNITS

可逆液压马达驱动泵 / REVERSIBLE HYDRUALIC MOTORPUMPS 102
电动高压泵 / ELECTRIC PUMPS 103

高压热水器系列
HEATERS

小型系列 / SMALL 108
中型系列 / MEDIUM 110
大型系列 / BIG 112
超大型系列 / MAXI 114
柴油带电控盒 / DIESEL WITH ELECTRICAL BOX 118
液化石油气和天然气 / LPG AND METHAN 124
电锅炉 / ELECTRIC HEATERS 128
火箱 15,21,25,30 升 / FIREBOX 15,21,25,30 LT 132

配件
ACCESSORIES

软管卷盘和高压软管 / HOSE REEL AND HIGH PRESSURE HOSE 136
枪头和枪杆 / GUNS AND LANCES 136
安全阀和溢流阀 / SAFETY AND BYPASS VALVES 138
高压喷嘴 / HIGH PRESSURE NOZZLES 139
压力表，接头，过滤器 / PRESSURE GAUGES, FITTINGS AND FILTERS 139

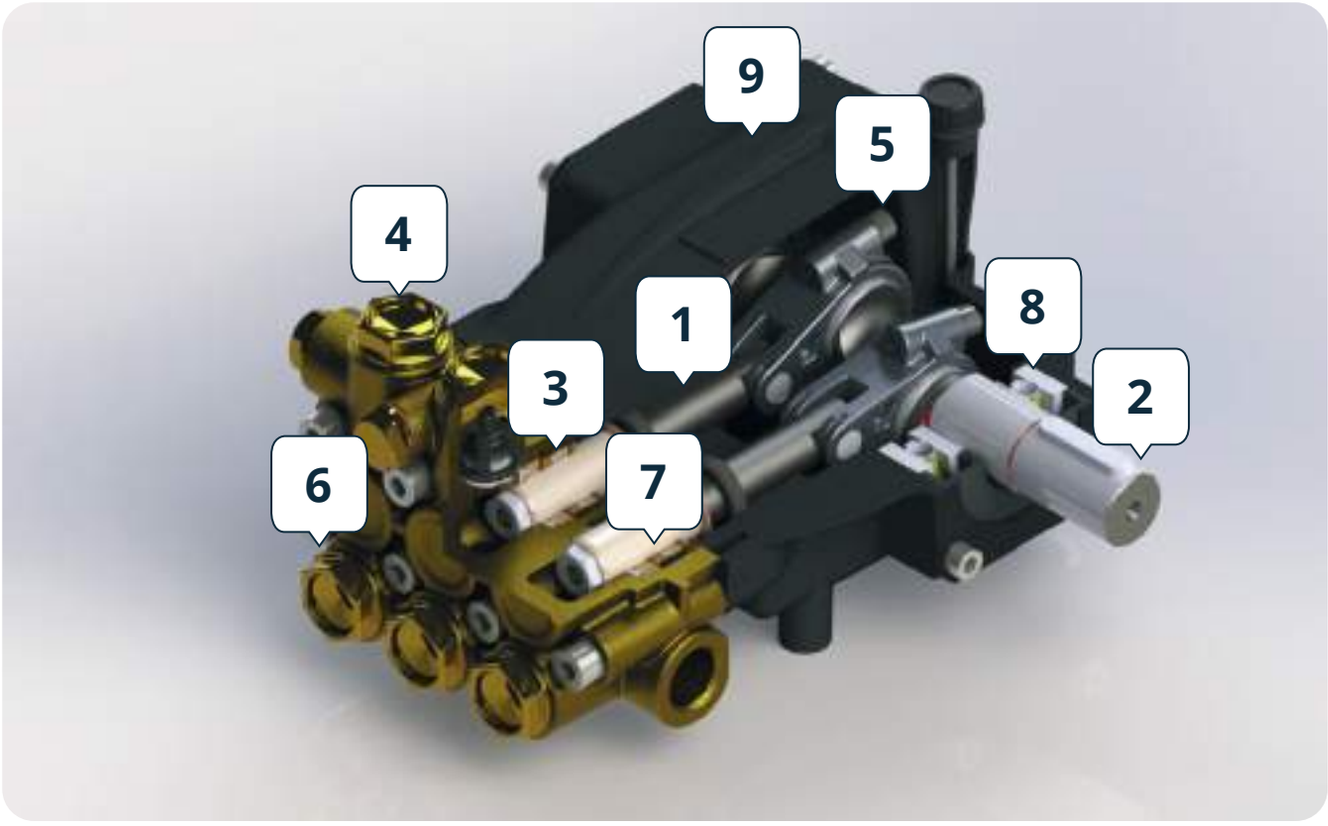

1 磨削的活塞杆可减少滑动时的摩擦并提供更好的密封性
Ground pistons for smoother stroke and better oil-tightness

2 加长的大直径传动轴输出更大的扭矩
Oversized shaft and long end section for better torque transmission

3 超厚陶瓷活塞具有更长的使用寿命
Extra-thick ceramic pistons for greater durability

4 大流量管道和进出口阀
Intake and delivery valves with larger water passages

5 用特殊减摩合金制成的连杆
Rods made of a special alloy antifriction

6 高强度锻造黄铜泵头
Forged brass pump head, designed for strength

7 双垫片密封系统-按需定制高温密封85°C
Double gasket sealing system - On Demand high temperature seals 85°C

8 高负载圆锥滚子轴承（仅pm型使用球轴承）
Tapered roller bearings with high resistance (Ball bearings only PM)

9 泵体设计具有长期耐用性
Body of the pump designed for long-term durability

液压马达
Hydraulic motor

汽油发动机
Gasoline engine

带法兰的高压泵 / **PUMPS WITH FLANGE**

PMD	PMD-CW CAR WASH	TPMD HIGH TEMP.	PMD-HY	PM-EDM	MMD	MMD-CW CAR WASH	TPMD HIGH TEMP.
18	20	22	24	26	34	36	38

高压泵
HIGH PRESSURE PUMPS

带法兰的高压泵 / PUMPS WITH FLANGE

MMX	MMD-HY	MMD-EDM E4	GM	GM-CW CAR WASH	TGM HIGH TEMP.	GMX	XM	LMX
40	42	44	52	56	60	64	72	78

泵按流量排列
PUMPS LISTED ACCORDING TO FLOW RATE

流量 / FLOW RATE				压力 PRESSURE		型号 MODEL	泵头 HEAD
1450 Rpm		1740 Rpm					
l/min	gpm	l/min	gpm	Bar	Psi		
8,5	**2,24**	10,2	2,69	150	2175	**TPMD8150**	镀镍头 / *Nickel*
8,5	**2,24**	10,2	2,69	200	2900	**PMD8200**	黄铜头 / *Brass*
10	**2,64**	12	3,17	150	2175	**TPMD10150**	镀镍头 / *Nickel*
10	**2,64**	12	3,17	200	2900	**PMD10200**	黄铜头 / *Brass*
11	**2,91**	13,2	3,49	150	2175	**TPMD11150**	镀镍头 / *Nickel*
11	**2,91**	13,2	3,49	200	2900	**PMD11200**	黄铜头 / *Brass*
11	**2,91**	13,2	3,49	500	7252	**XM11500**	黄铜头 / *Brass*
12	**3,17**	14,4	3,8	150	2175	**TPMD12150**	镀镍头 / *Nickel*
12	**3,17**	14,4	3,8	200	2900	**PMD12200**	黄铜头 / *Brass*
12	**3,17**	14,4	3,8	200	2900	**TMMD12200**	镀镍头 / *Nickel*
12	**3,17**	14,4	3,8	200	2900	**MMX12200**	不锈钢头 / *Stainless Steel*
12	**3,17**	14,4	3,8	250	3626	**MMD12250**	黄铜头 / *Brass*
13	**3,43**	15,6	4,12	150	2175	**TPMD13150**	镀镍头 / *Nickel*
13	**3,43**	15,6	4,12	200	2900	**PMD13200**	黄铜头 / *Brass*
14	**3,7**	16,8	4,44	150	2175	**TPMD15150**	镀镍头 / *Nickel*
14	**3,7**	16,8	4,44	200	2900	**PMD14200**	黄铜头 / *Brass*
15	**3,96**	18	4,76	150	2175	**TPMD15150**	镀镍头 / *Nickel*
15	**3,96**	18	4,76	200	2900	**PMD15200**	黄铜头 / *Brass*
15	**3,96**	18	4,76	200	2900	**TMMD15200**	镀镍头 / *Nickel*
15	**3,96**	18	4,76	200	2900	**MMX12200**	不锈钢头 / *Stainless Steel*
15	**3,96**	18	4,76	250	3626	**MMD15250**	黄铜头 / *Brass*
15	**3,96**	18	4,76	500	7252	**XM15500**	黄铜头 / *Brass*
17	**4,49**	20,4	5,39	500	7252	**XM17500**	黄铜头 / *Brass*
18	**4,76**	21,6	5,71	200	2900	**TMMD18200**	镀镍头 / *Nickel*
18	**4,76**	21,6	5,71	200	2900	**MMX18200**	不锈钢头 / *Stainless Steel*
18	**4,76**	21,6	5,71	200	2900	**TGM18200**	镀镍头 / *Nickel*
18	**4,76**	21,6	5,71	200	2900	**GMX18200**	不锈钢头 / *Stainless Steel*
18	**4,76**	21,6	5,71	250	3626	**MMD18250**	黄铜头 / *Brass*
18	**4,76**	21,6	5,71	300	4351	**GM18300**	黄铜头 / *Brass*
21	**5,55**	25,2	6,66	200	2900	**TMMD21200**	镀镍头 / *Nickel*
21	**5,55**	25,2	6,66	200	2900	**MMX21200**	不锈钢头 / *Stainless Steel*
21	**5,55**	25,2	6,66	250	3626	**MMD21250**	黄铜头 / *Brass*
21	**5,55**	25,2	6,66	500	7252	**XM21500**	黄铜头 / *Brass*
22	**5,81**	26,4	6,97	200	2900	**TGM22200**	镀镍头 / *Nickel*
22	**5,81**	26,4	6,97	200	2900	**GMX22200**	不锈钢头 / *Stainless Steel*
22	**5,81**	26,4	6,97	300	4351	**GM22300**	黄铜头 / *Brass*

泵按流量排列
PUMPS LISTED ACCORDING TO FLOW RATE

流量 / FLOW RATE				压力 PRESSURE		型号 MODEL	泵头 HEAD
1450 Rpm		1740 Rpm					
l/min	gpm	l/min	gpm	Bar	Psi		
25	6,6	30	7,93	200	2900	TGM25200	镀镍头 / *Nickel*
25	6,6	30	7,93	200	2900	GMX25200	不锈钢头 / *Stainless Steel*
25	6,6	30	7,93	300	4351	GM25300	黄铜头 / *Brass*
27	7,13	32,4	8,56	200	2900	TGM27200	镀镍头 / *Nickel*
27	7,13	32,4	8,56	200	2900	GMX27200	不锈钢头 / *Stainless Steel*
27	7,13	32,4	8,56	300	4351	GM27300	黄铜头 / *Brass*
29	7.66			500	7252	LMX29500	不锈钢头 / *Stainless Steel*
30	7,92	36	9,51	200	2900	TGM30200	镀镍头 / *Nickel*
30	7,92	36	9,51	200	2900	GMX30200	不锈钢头 / *Stainless Steel*
30	7,92	36	9,51	250	3626	GM30250	黄铜头 / *Brass*
33	8,71	39,6	10,46	200	2900	TGM33200	镀镍头 / *Nickel*
33	8,71	39,6	10,46	200	2900	GMX33200	不锈钢头 / *Stainless Steel*
33	8,71	39,6	10,46	250	3626	GM33250	黄铜头 / *Brass*
35	9,24	42	11,1	170	2466	TGM35170	镀镍头 / *Nickel*
35	9,24	42	11,1	170	2466	GMX35170	不锈钢头 / *Stainless Steel*
35	9,24	42	11,1	170	2466	GM35170	黄铜头 / *Brass*
36	9.5			500	7252	LMX36500	不锈钢头 / *Stainless Steel*
40	10,57	48	12,68	170	2466	TGM40170	镀镍头 / *Nickel*
40	10,57	48	12,68	170	2466	GMX40170	不锈钢头 / *Stainless Steel*
40	10,57	48	12,68	170	2466	GM40170	黄铜头 / *Brass*
40	10,57			280	4060	LM40280	铸铁头 / *Cast Iron*
41	10.82			500	7252	LMX41500	不锈钢头 / *Stainless Steel*
43	11,36	51,6	13,63	170	2466	TGM43170	镀镍头 / *Nickel*
43	11,36	51,6	13,63	170	2466	GMX43170	不锈钢头 / *Stainless Steel*
43	11,36	51,6	13,63	170	2466	GM43170	黄铜头 / *Brass*
50	13,21	60	15,85	150	2175	TGM50150	镀镍头 / *Nickel*
50	13,21	60	15,85	150	2175	GMX50150	不锈钢头 / *Stainless Steel*
50	13,21	60	15,85	150	2175	GM50150	黄铜头 / *Brass*
54	14,27	64,8	17,12	150	2175	TGM54150	镀镍头 / *Nickel*
54	14,27	64,8	17,12	150	2175	GMX54150	不锈钢头 / *Stainless Steel*
54	14,27	64,8	17,12	150	2175	GM54150	黄铜头 / *Brass*
63	16,64	75,6	19,97	150	2175	TGM63150	镀镍头 / *Nickel*
63	16,64	75,6	19,97	150	2175	GMX63150	不锈钢头 / *Stainless Steel*
63	16,64	75,6	19,97	150	2175	GM63150	黄铜头 / *Brass*
67	17,68			280	4060	LM67280	铸铁头 / *Cast Iron*
80	21,12			280	4060	LM80280	铸铁头 / *Cast Iron*
90	23,77			280	4060	LM90280	铸铁头 / *Cast Iron*

泵按流量排列
PUMPS LISTED ACCORDING TO FLOW RATE

流量 / FLOW RATE				压力 PRESSURE		型号 MODEL	泵头 HEAD
1000 Rpm		1200 Rpm					
l/min	gpm	l/min	gpm	Bar	Psi		
15	3.96	18	4.76	250	3625	MMD15250	黄铜头 / *Brass*
15	3.96	18	4.76	200	2900	TMM15200	镀镍头 / *Nickel*
15	3.96	18	4.76	200	2900	MMX15200	不锈钢头 / *Stainless Steel*
20	5,28			500	7252	LMX29500	不锈钢头 / *Stainless Steel*
25	6.6			500	7252	LMX36500	不锈钢头 / *Stainless Steel*
30	7.92			500	7252	LMX41500	不锈钢头 / *Stainless Steel*
45	11.88			150	2175	LM45150	铸铁头 / *Cast Iron*
60	15.84			280	4060	LM60280	铸铁头 / *Cast Iron*
80	21.12			150	2175	LM80150	铸铁头 / *Cast Iron*
100	23.4			150	2175	LM100150	铸铁头 / *Cast Iron*
120	31.68			150	2175	LM120150	铸铁头 / *Cast Iron*

液压发动机 / HYDRAULIC SYSTEM

流量 / FLOW RATE		压力 PRESSURE		型号 MODEL	发动机 ENGINE	泵头 HEAD
1450 Rpm						
l/min	gpm	bar	psi			
8,5	2,24	200	2900	PMD8200-HY	液压发动机 / *Hydraulic*	黄铜头 / *Brass*
10	2,64	200	2900	PMD10200-HY	液压发动机 / *Hydraulic*	黄铜头 / *Brass*
12	3,17	200	2900	PMD12200-HY	液压发动机 / *Hydraulic*	黄铜头 / *Brass*
12	3,17	250	3626	MMD12250-HY	液压发动机 / *Hydraulic*	黄铜头 / *Brass*
13	3,43	200	2900	PMD13200-HY	液压发动机 / *Hydraulic*	黄铜头 / *Brass*
14	3,7	200	2900	PMD14200-HY	液压发动机 / *Hydraulic*	黄铜头 / *Brass*
15	3,96	200	2900	PMD15200-HY	液压发动机 / *Hydraulic*	黄铜头 / *Brass*
15	3,96	250	3626	MMD15250-HY	液压发动机 / *Hydraulic*	黄铜头 / *Brass*
18	4,76	275	4000	MMD18275-HY	液压发动机 / *Hydraulic*	黄铜头 / *Brass*
21	5,55	250	3626	MMD21250-HY	液压发动机 / *Hydraulic*	黄铜头 / *Brass*

内切电机 / ENDOTHERMIC SYSTEM

流量 / FLOW RATE		压力 PRESSURE		型号 MODEL	发动机 ENGINE	泵头 HEAD
3400 Rpm						
l/min	gpm	bar	psi			
8,5	2,24	200	2900	PM8200-EDM-E3	内切电机 / *Endothermic*	黄铜头 / *Brass*
8,5	2,24	200	2900	PM8200-EDM-E4	内切电机 / *Endothermic*	黄铜头 / *Brass*
10	2,64	200	2900	PM10200-EDM-E4	内切电机 / *Endothermic*	黄铜头 / *Brass*
11	2,91	200	2900	PM11200-EDM-E3	内切电机 / *Endothermic*	黄铜头 / *Brass*
11,5	3,04	200	2900	PM11200-EDM-E4	内切电机 / *Endothermic*	黄铜头 / *Brass*
13,5	3,57	275	4000	MMD13250-EDM-E4	内切电机 / *Endothermic*	黄铜头 / *Brass*
14	3,7	200	2900	PM14200-EDM-E3	内切电机 / *Endothermic*	黄铜头 / *Brass*
14	3,7	200	2900	PM14200-EDM-E4	内切电机 / *Endothermic*	黄铜头 / *Brass*
15	3,96	200	2900	PM15200-EDM-E4	内切电机 / *Endothermic*	黄铜头 / *Brass*
16	4,23	275	4000	MM16275-EDM-E4	内切电机 / *Endothermic*	黄铜头 / *Brass*
18,3	4,83	275	4000	MMD18275-EDM-E4	内切电机 / *Endothermic*	黄铜头 / *Brass*
21	5,55	275	4000	MMD21275-EDM-E4	内切电机 / *Endothermic*	黄铜头 / *Brass*

泵按压力排列
PUMPS LISTED ACCORDING TO PRESSURE

压力 PRESSURE		流量 / FLOW RATE				型号 MODEL	泵头 HEAD
		1450 Rpm		1740 Rpm			
Bar	Psi	l/min	gpm	l/min	gpm		
150	**2175**	8,5	2,24	10,2	2,69	**TPMD80200**	镀镍头 / *Nickel*
150	**2175**	10	2,64	12	3,17	**TPMD10200**	镀镍头 / *Nickel*
150	**2175**	11	2,91	13,2	3,49	**TPMD11200**	镀镍头 / *Nickel*
150	**2175**	12	3,17	14,4	3,8	**TPMD12200**	镀镍头 / *Nickel*
150	**2175**	13	3,43	15,6	4,12	**TPMD13200**	镀镍头 / *Nickel*
150	**2175**	14	3,7	16,8	4,44	**TPMD14200**	镀镍头 / *Nickel*
150	**2175**	15	3,96	18	4,76	**TPMD15200**	镀镍头 / *Nickel*
150	**2175**	50	13,21	60	15,85	**GM50150**	黄铜头 / *Brass*
150	**2175**	54	14,27	64,8	17,12	**GM54150**	黄铜头 / *Brass*
150	**2175**	63	16,64	75,6	19,97	**GM63150**	黄铜头 / *Brass*
150	**2175**	50	13,21	60	15,85	**TGM50150**	镀镍头 / *Nickel*
150	**2175**	54	14,27	64,8	17,12	**TGM54150**	镀镍头 / *Nickel*
150	**2175**	63	16,64	75,6	19,97	**TGM63150**	镀镍头 / *Nickel*
150	**2175**	50	13,21	60	15,85	**GMX50150**	不锈钢头 / *Stainless Steel*
150	**2175**	54	14,27	64,8	17,12	**GMX54150**	不锈钢头 / *Stainless Steel*
150	**2175**	63	16,64	75,6	19,97	**GMX63150**	不锈钢头 / *Stainless Steel*
170	**2466**	35	9,24	42	11,09	**GM35170**	黄铜头 / *Brass*
170	**2466**	40	10,56	48	12,67	**GM40170**	黄铜头 / *Brass*
170	**2466**	43	11,35	51,6	13,62	**GM43170**	黄铜头 / *Brass*
170	**2466**	35	9,24	42	11,09	**TGM35170**	镀镍头 / *Nickel*
170	**2466**	40	10,56	48	12,67	**TGM40170**	镀镍头 / *Nickel*
170	**2466**	43	11,35	51,6	13,62	**TGM43170**	镀镍头 / *Nickel*
170	**2466**	35	9,24	42	11,09	**GMX35170**	不锈钢头 / *Stainless Steel*
170	**2466**	40	10,56	48	12,67	**GMX40170**	不锈钢头 / *Stainless Steel*
170	**2466**	43	11,35	51,6	13,62	**GMX43170**	不锈钢头 / *Stainless Steel*
200	**2900**	8,5	2,24	10,2	2,69	**PMD8200**	黄铜头 / *Brass*
200	**2900**	10	2,64	12	3,17	**PMD10200**	黄铜头 / *Brass*
200	**2900**	11	2,91	13,2	3,49	**PMD11200**	黄铜头 / *Brass*
200	**2900**	12	3,17	14,4	3,8	**PMD12200**	黄铜头 / *Brass*
200	**2900**	13	3,43	15,6	4,12	**PMD13200**	黄铜头 / *Brass*
200	**2900**	14	3,7	16,8	4,44	**PMD14200**	黄铜头 / *Brass*
200	**2900**	15	3,96	18	4,76	**PMD15200**	黄铜头 / *Brass*
200	**2900**	12	3,17	14,4	3,8	**TMMD12200**	镀镍头 / *Nickel*
200	**2900**	15	3,96	18	4,76	**TMMD15200**	镀镍头 / *Nickel*
200	**2900**	18	4,76	21,6	5,71	**TMMD18200**	镀镍头 / *Nickel*
200	**2900**	21	5,55	25,2	6,66	**TMMD21200**	镀镍头 / *Nickel*

泵按压力排列
PUMPS LISTED ACCORDING TO PRESSURE

压力 PRESSURE		流量 / FLOW RATE				型号 MODEL	泵头 HEAD
		1450 Rpm		1740 Rpm			
Bar	Psi	l/min	gpm	l/min	gpm		
200	2900	12	3,17	14,4	3,8	MMX12200	不锈钢头 / *Stainless Steel*
200	2900	15	3,96	18	4,76	MMX15200	不锈钢头 / *Stainless Steel*
200	2900	18	4,76	21,6	5,71	MMX18200	不锈钢头 / *Stainless Steel*
200	2900	21	5,55	25,2	6,66	MMX21200	不锈钢头 / *Stainless Steel*
200	2900	18	4,76	21,6	5,71	TGM18200	镀镍头 / *Nickel*
200	2900	22	5,81	26,4	6,97	TGM22200	镀镍头 / *Nickel*
200	2900	25	6,6	30	7,93	TGM25200	镀镍头 / *Nickel*
200	2900	27	7,13	32,4	8,56	TGM27200	镀镍头 / *Nickel*
200	2900	30	7,93	36	9,51	TGM30200	镀镍头 / *Nickel*
200	2900	33	8,72	39,6	10,46	TGM33200	镀镍头 / *Nickel*
200	2900	18	4,76	21,6	5,71	GMX18200	不锈钢头 / *Stainless Steel*
200	2900	22	5,81	26,4	6,97	GMX22200	不锈钢头 / *Stainless Steel*
200	2900	25	6,6	30	7,93	GMX25200	不锈钢头 / *Stainless Steel*
200	2900	27	7,13	32,4	8,56	GMX27200	不锈钢头 / *Stainless Steel*
200	2900	30	7,93	36	9,51	GMX30200	不锈钢头 / *Stainless Steel*
200	2900	33	8,72	39,6	10,46	GMX33200	不锈钢头 / *Stainless Steel*
250	3626	12	3,17	14,4	3,8	MMD12250	黄铜头 / *Brass*
250	3626	15	3,96	18	4,76	MMD15250	黄铜头 / *Brass*
250	3626	18	4,76	21,6	5,71	MMD18250	黄铜头 / *Brass*
250	3626	21	5,55	25,2	6,66	MMD21250	黄铜头 / *Brass*
250	3626	30	7,92	36	9,5	GM30250	黄铜头 / *Brass*
250	3626	33	8,71	39,6	10,45	GM33250	黄铜头 / *Brass*
280	4060	40	10,56			LM40280	铸铁头 / *Cast Iron*
280	4060	67	17,68			LM67280	铸铁头 / *Cast Iron*
280	4060	80	21,12			LM80280	铸铁头 / *Cast Iron*
280	4060	90	23,77			LM90280	铸铁头 / *Cast Iron*
300	4351,13	18	4,76	21,6	5,71	GM18300	黄铜头 / *Brass*
300	4351,13	22	5,81	26,4	6,97	GM22300	黄铜头 / *Brass*
300	4351,13	25	6,6	30	7,93	GM25300	黄铜头 / *Brass*
300	4351,13	27	7,13	32,4	8,56	GM27300	黄铜头 / *Brass*
500	7251,89	11	2,91	13,2	3,49	XM11500	黄铜头 / *Brass*
500	7251,89	15	3,96	18	4,76	XM15500	黄铜头 / *Brass*
500	7251,89	17	4,49	20,4	5,39	XM17500	黄铜头 / *Brass*
500	7251,89	21	5,55	25,2	6,66	XM21500	黄铜头 / *Brass*

Mazzoni S.r.l. - Via Prati Vecchi 5 - 4025 Cavriago (RE) - Italy | www.e-mazzoni.it | info@e-mazzoni.it

泵按压力排列
PUMPS LISTED ACCORDING TO PRESSURE

压力 PRESSURE		流量 / FLOW RATE				型号 MODEL	泵头 HEAD
		1000 Rpm		1200 Rpm			
Bar	Psi	l/min	gpm	l/min	gpm		
150	2175	80	21.12			LM80150	铸铁头 / *Cast Iron*
150	2175	100	26.4			LM100150	铸铁头 / *Cast Iron*
150	2175	120	31.68			LM120150	铸铁头 / *Cast Iron*
200	2900	15	3.96	18	4.76	TMM15200	镀镍头 / *Nickel*
200	2900	15	3.96	18	4.76	MMX15200	不锈钢头 / *Stainless Steel*
250	3625	15	3.96	18	4.76	MMD15250	黄铜头 / *Brass*
250	3625	15	3.96	18	4.76	MMD-CW15250	镀镍头 / *Nickel*
280	4060	45	11.88			LM45280	铸铁头 / *Cast Iron*
280	4060	60	15.84			LM60280	铸铁头 / *Cast Iron*
500	7251	20	5.28			LMX29500	不锈钢头 / *Stainless Steel*
500	7251	25	6.6			LMX36500	不锈钢头 / *Stainless Steel*
500	7251	41	10.82			LMX41500	不锈钢头 / *Stainless Steel*

液压发动机 / HYDRAULIC SYSTEM

压力 PRESSURE		流量 / FLOW RATE		型号 MODEL	发动机 ENGINE	泵头 HEAD
		1450 Rpm				
Bar	Psi	l/min	gpm			
200	2900	8,5	2,24	PMD8200-HY	液压发动机 / *Hydraulic*	镀镍头 / *Nickel*
200	2900	10	2,64	PMD10200-HY	液压发动机 / *Hydraulic*	镀镍头 / *Nickel*
200	2900	11	2,91	PMD11200-HY	液压发动机 / *Hydraulic*	镀镍头 / *Nickel*
200	2900	12	3,17	PMD12200-HY	液压发动机 / *Hydraulic*	镀镍头 / *Nickel*
200	2900	13	3,43	PMD13200-HY	液压发动机 / *Hydraulic*	镀镍头 / *Nickel*
200	2900	14	3,7	PMD14200-HY	液压发动机 / *Hydraulic*	镀镍头 / *Nickel*
200	2900	15	3,96	PMD15200-HY	液压发动机 / *Hydraulic*	镀镍头 / *Nickel*
250	3626	12	3,17	MMD12250-HY	液压发动机 / *Hydraulic*	镀镍头 / *Nickel*
250	3626	15	3,96	MMD15250-HY	液压发动机 / *Hydraulic*	镀镍头 / *Nickel*
250	3626	18	4,76	MMD18250-HY	液压发动机 / *Hydraulic*	镀镍头 / *Nickel*
250	3626	21	5,55	MMD21250-HY	液压发动机 / *Hydraulic*	镀镍头 / *Nickel*

内切电机 / ENDOTHERMIC SYSTEM

压力 PRESSURE		流量 / FLOW RATE		型号 MODEL	发动机 ENGINE	泵头 HEAD
		3400 Rpm				
Bar	Psi	l/min	gpm			
200	2900	8,5	2,24	PMD8200-EDM-E3	内切电机 / *Endothermic*	不锈钢头 / *Stainless Steel*
200	2900	11	2,91	PMD11200-EDM-E3	内切电机 / *Endothermic*	不锈钢头 / *Stainless Steel*
200	2900	14	3,7	PMD14200-EDM-E3	内切电机 / *Endothermic*	不锈钢头 / *Stainless Steel*
200	2900	8,5	2,24	PMD8200-EDM-E4	内切电机 / *Endothermic*	不锈钢头 / *Stainless Steel*
200	2900	10	2,64	PMD10200-EDM-E4	内切电机 / *Endothermic*	镀镍头 / *Nickel*
200	2900	11,5	3,04	PMD11200-EDM-E4	内切电机 / *Endothermic*	镀镍头 / *Nickel*
200	2900	14	3,7	PMD14200-EDM-E4	内切电机 / *Endothermic*	镀镍头 / *Nickel*
200	2900	15	3,96	PMD15200-EDM-E4	内切电机 / *Endothermic*	镀镍头 / *Nickel*
275	4000	13,5	3,57	MMD13275-EDM-E4	内切电机 / *Endothermic*	镀镍头 / *Nickel*
275	4000	16	4,23	MMD16275-EDM-E4	内切电机 / *Endothermic*	镀镍头 / *Nickel*
275	4000	18,3	4,83	MMD18275-EDM-E4	内切电机 / *Endothermic*	不锈钢头 / *Stainless Steel*
275	4000	20,9	5,52	MMD21275-EDM-E4	内切电机 / *Endothermic*	不锈钢头 / *Stainless Steel*

PMD SERIES

PMD

PMD CW

TPMD

PMD-HY

PM-EDM E3
PM-EDM E4

PMD

最高进水温度 MAX INPUT WATER TEMPERATURE	最低输入压力 MINIMAL INPUT PRESSURE	进水 INLET	出水 OUTLET
65°C *149° F*	0.2 BAR 2.9 PSI	G 1/2"	G 3/8"

PMD	流量 FLOW RATE		转速 ROUNDS	最高压力 MAX PRESSURE		机油容量 OIL CAPACITY		净重 WEIGHT	
	L/min	Gpm	Rpm	Bar	Psi	Lt	Gal	Kg	Lbs
50HZ	8.50 » 15.00	2.24 » 3.96	1450	200	2900	0.4	0.1	7.5	16.53
60Hz	10.20 » 18.00	2.69 » 4.76	1740						

PMD

代码 Code	型号 Model	流量 / Flow Rate l/min - gpm 1450 rpm		1740 rpm		压力 / Pressure Bar	Psi	功率 / Power 50Hz HP	50Hz Kw	60Hz HP	60Hz Kw	轴 Shaft L: 40mm Ø 24
P3.010.022	**PMD8200R**	8.50	*2,24*	10.20	*2,69*	200.00	*2900*	4,42	3,30	5,30	3,95	右 / Right
P3.010.023	**PMD10200R**	10.00	*2,64*	12.00	*3,17*	200.00	*2900*	5,19	3,87	6,23	4,65	右 / Right
P3.010.024	**PMD11200R**	11.00	*2,91*	13.20	*3,49*	200.00	*2900*	5,71	4,26	6,86	5,12	右 / Right
P3.010.025	**PMD12200R**	12.00	*3,17*	14.40	*3,8*	200.00	*2900*	6,23	4,65	7,48	5,58	右 / Right
P3.010.026	**PMD13200R**	13.00	*3,43*	15.60	*4,12*	200.00	*2900*	6,75	5,03	8,10	6,04	右 / Right
P3.010.027	**PMD14200R**	14.00	*3,70*	16.80	*4,44*	200.00	*2900*	7,27	5,42	8,73	6,51	右 / Right
P3.010.021	**PMD15200R**	15.00	*3,96*	18.00	*4,76*	200.00	*2900*	7,79	5,81	9,35	6,97	右 / Right
P3.010.029	**PMD8200L**	8.50	*2,24*	10.20	*2,69*	200.00	*2900*	4,42	3,30	5,30	3,95	左 / Left
P3.010.030	**PMD10200L**	10.00	*2,64*	12.00	*3,17*	200.00	*2900*	5,19	3,87	6,23	4,65	左 / Left
P3.010.031	**PMD11200L**	11.00	*2,91*	13.20	*3,49*	200.00	*2900*	5,71	4,26	6,86	5,12	左 / Left
P3.010.032	**PMD12200L**	12.00	*3,17*	14.40	*3,8*	200.00	*2900*	6,23	4,65	7,48	5,58	左 / Left
P3.010.033	**PMD13200L**	13.00	*3,43*	15.60	*4,12*	200.00	*2900*	6,75	5,03	8,10	6,04	左 / Left
P3.010.034	**PMD14200L**	14.00	*3,7*	16.80	*4,44*	200.00	*2900*	7,27	5,42	8,73	6,51	左 / Left
P3.010.028	**PMD15200L**	15.00	*3,96*	18.00	*4,76*	200.00	*2900*	7,79	5,81	9,35	6,97	左 / Left

备件/ *SPARE PARTS*

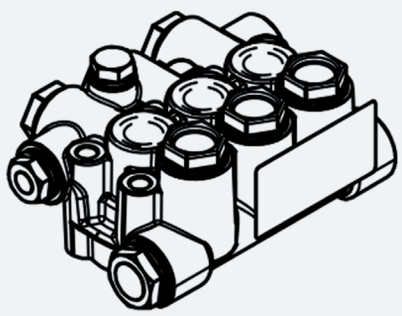

KIT - P9.040.002

泵头组件

COMPLETE HEAD OF THE PUMP

KIT - P9.039.001

油封

KIT OIL SEAL PUMP MM PM

KIT - P9.003.003

柱塞密封垫圈

KIT PLUNGER SEALS

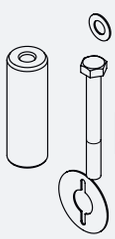

KIT - P9.004.023

陶瓷柱塞

KIT CERAMIC PISTON

KIT - P9.001.002

阀组件

COMPLETE VALVE

KIT - P9.003.004

密封组件

KIT COMPLETE SEALS

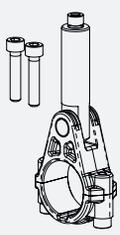

KIT - P9.041.008

预装配连接杆

PREASSEMBLED CONNECTING ROD

PMD-CW

汽车清洗 / CAR WASH

最高进水温度 MAX INPUT WATER TEMPERATURE	最低输入压力 MINIMAL INPUT PRESSURE	进水 INLET	出水 OUTLET	镀镍歧管 NICKEL PLATED MANIFOLD
65°C 149° F	0.2 BAR 2.9 PSI	G 1/2"	G 3/8"	

PMD-CW CAR WASH	流量 FLOW RATE		转速 ROUNDS	最高压力 MAX PRESSURE		机油容量 OIL CAPACITY		净重 WEIGHT	
	L/min	Gpm	Rpm	Bar	Psi	Lt	Gal	Kg	Lbs
50HZ	8.50 » 15.00	2.24 » 3.96	1450	200	2900	0.4	0.1	7.5	16.53
60Hz	10.20 » 18.00	2.69 » 4.76	1740						

Mazzoni S.r.l. - Via Prati Vecchi 5 - 4025 Cavriago (RE) - Italy | www.e-mazzoni.it | info@e-mazzoni.it

PMD-CW

汽车清洗 / CAR WASH

代码 Code	型号 Model	流量 / Flow Rate l/min - gpm 1450 rpm		1740 rpm		压力 / Pressure Bar	Psi	功率 / Power 50Hz HP	50Hz Kw	60Hz HP	60Hz Kw	轴 Shaft L: 40mm Ø 24
P3.012.022	**PMD-CW8200R**	8,5	2,24	10,2	2,69	200	2900	4,42	3,30	5,30	3,95	右 / Right
P3.012.023	**PMD-CW10200R**	10	2,64	12,00	3,17	200	2900	5,19	3,87	6,23	4,65	右 / Right
P3.012.024	**PMD-CW11200R**	11	2,91	13,20	3,49	200	2900	5,71	4,26	6,86	5,12	右 / Right
P3.012.025	**PMD-CW12200R**	12	3,17	14,40	3,80	200	2900	6,23	4,65	7,48	5,58	右 / Right
P3.012.026	**PMD-CW13200R**	13	3,43	15,60	4,12	200	2900	6,75	5,03	8,10	6,04	右 / Right
P3.012.027	**PMD-CW14200R**	14	3,70	16,80	4,44	200	2900	7,27	5,42	8,73	6,51	右 / Right
P3.012.021	**PMD-CW15200R**	15	3,96	18,00	4,76	200	2900	7,79	5,81	9,35	6,97	右 / Right
P3.012.029	**PMD-CW8200L**	8,5	2,24	10,20	2,69	200	2900	4,42	3,30	5,30	3,95	左 / Left
P3.012.030	**PMD-CW10200L**	10	2,64	12,00	3,17	200	2900	5,19	3,87	6,23	4,65	左 / Left
P3.012.031	**PMD-CW11200L**	11	2,91	13,20	3,49	200	2900	5,71	4,26	6,86	5,12	左 / Left
P3.012.032	**PMD-CW12200L**	12	3,17	14,40	3,80	200	2900	6,23	4,65	7,48	5,58	左 / Left
P3.012.033	**PMD-CW13200L**	13	3,43	15,60	4,12	200	2900	6,75	5,03	8,10	6,04	左 / Left
P3.012.034	**PMD-CW14200L**	14	3,70	16,80	4,44	200	2900	7,27	5,42	8,73	6,51	左 / Left
P3.012.028	**PMD-CW15200L**	15	3,96	18,00	4,76	200	2900	7,79	5,81	9,35	6,97	左 / Left

备件 / SPARE PARTS

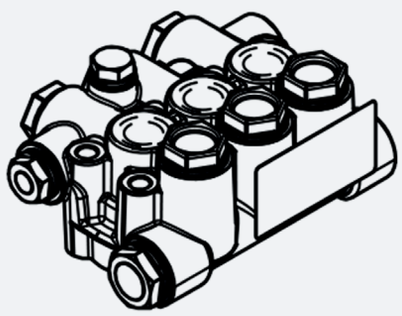

KIT - P9.040.013

泵头组件

COMPLETE HEAD OF THE PUMP

KIT - P9.039.001

油封

KIT OIL SEAL PUMP MM PM

KIT - P9.003.055

柱塞密封垫圈

KIT PLUNGER SEALS

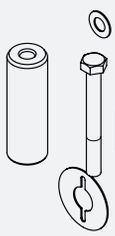

KIT - P9.004.023

陶瓷柱塞

KIT CERAMIC PISTON

KIT - P9.001.002

阀组件

COMPLETE VALVE

KIT - P9.003.056

密封组件

KIT COMPLETE SEALS

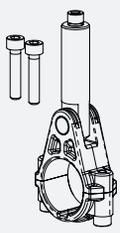

KIT - P9.041.008

预装配连接杆

PREASSEMBLED CONNECTING ROD

TPMD

高温 / HIGH TEMPERATURE

最高进水温度 MAX INPUT WATER TEMPERATURE	最低输入压力 MINIMAL INPUT PRESSURE	进水 INLET	出水 OUTLET	镀镍歧管 NICKEL PLATED MANIFOLD
85°C 185° F	3 BAR 43.51 PSI	G 1/2"	G 3/8"	

TPMD HIGH TEMPERATURE	流量 FLOW RATE		转速 ROUNDS	最高压力 MAX PRESSURE		机油容量 OIL CAPACITY		净重 WEIGHT	
	L/min	Gpm	Rpm	Bar	Psi	Lt	Gal	Kg	Lbs
50HZ	8.50 » 15.00	2.24 » 3.96	1450	150	2175.57	0.4	0.1	7.5	16.53
60Hz	10.20 » 18.00	2.69 » 4.76	1740						

Mazzoni S.r.l. - Via Prati Vecchi 5 - 4025 Cavriago (RE) - Italy | www.e-mazzoni.it | info@e-mazzoni.it

TPMD

高温 / HIGH TEMPERATURE

代码 Code	型号 Model	流量 / Flow Rate l/min - gpm 1450 rpm		1740 rpm		压力 / Pressure Bar	Psi	功率 / Power 50Hz HP	50Hz Kw	60Hz HP	60Hz Kw	轴 Shaft L: 40mm Ø 24
P3.011.022	**TMPD8150 R**	8.50	*2,24*	10.20	*2,69*	150.00	*2175.57*	3,31	2,47	3,97	2,96	右 / Right
P3.011.023	**TMPD10150 R**	10.00	*2,64*	12.00	*3,17*	150.00	*2175.57*	3,90	2,91	4,68	3,49	右 / Right
P3.011.024	**TMPD11150 R**	11.00	*2,91*	13.20	*3,49*	150.00	*2175.57*	4,29	3,20	5,14	3,83	右 / Right
P3.011.025	**TMPD12150 R**	12.00	*3,17*	14.40	*3,8*	150.00	*2175.57*	4,68	3,49	5,61	4,18	右 / Right
P3.011.026	**TMPD13150 R**	13.00	*3,43*	15.60	*4,12*	150.00	*2175.57*	5,06	3,77	6,08	4,53	右 / Right
P3.011.027	**TMPD14150 R**	14.00	*3,7*	16.80	*4,44*	150.00	*2175.57*	5,45	4,06	6,55	4,88	右 / Right
P3.011.021	**TMPD15150 R**	15.00	*3,96*	18.00	*4,76*	150.00	*2175.57*	5,84	4,35	7,01	5,23	右 / Right
P3.011.029	**TMPD8150 L**	8.50	*2,24*	10.20	*2,69*	150.00	*2175.57*	3,31	2,47	3,97	2,96	左 / Left
P3.011.030	**TMPD10150 L**	10.00	*2,64*	12.00	*3,17*	150.00	*2175.57*	3,90	2,91	4,68	3,49	左 / Left
P3.011.031	**TMPD11150 L**	11.00	*2,91*	13.20	*3,49*	150.00	*2175.57*	4,29	3,20	5,14	3,83	左 / Left
P3.011.032	**TMPD12150 L**	12.00	*3,17*	14.40	*3,8*	150.00	*2175.57*	4,68	3,49	5,61	4,18	左 / Left
P3.011.033	**TMPD13150 L**	13.00	*3,43*	15.60	*4,12*	150.00	*2175.57*	5,06	3,77	6,08	4,53	左 / Left
P3.011.034	**TMPD14150 L**	14.00	*3,7*	16.80	*4,44*	150.00	*2175.57*	5,45	4,06	6,55	4,88	左 / Left
P3.011.028	**TMPD15150 L**	15.00	*3,96*	18.00	*4,76*	150.00	*2175.57*	5,84	4,35	7,01	5,23	左 / Left

备件 / *SPARE PARTS*

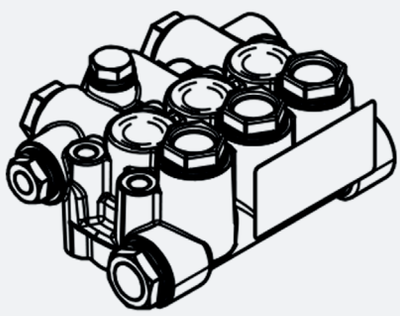

KIT - P9.040.015

泵头组件

COMPLETE HEAD OF THE PUMP

KIT - P9.039.001

油封

KIT OIL SEAL PUMP MM PM

KIT - P9.003.015

柱塞密封垫圈

KIT PLUNGER SEALS

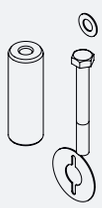

KIT - P9.004.023

陶瓷柱塞

KIT CERAMIC PISTON

KIT - P9.001.002

阀组件

COMPLETE VALVE

KIT - P9.003.016

密封组件

KIT COMPLETE SEALS

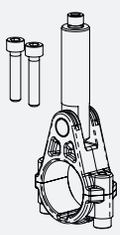

KIT - P9.041.008

预装配连接杆

PREASSEMBLED CONNECTING ROD

PMD-HY

液压马达 / HYDRAULIC MOTOR

最高进水温度 MAX INPUT WATER TEMPERATURE	最低输入压力 MINIMAL INPUT PRESSURE	进水 INLET	出水 OUTLET
65°C 149° F	0.2 BAR 2.9 PSI	G 1/2"	G 3/8"

PMD-HY	流量 FLOW RATE		转速 ROUNDS	最高压力 MAX PRESSURE		机油容量 OIL CAPACITY		净重 WEIGHT	
	L/min	Gpm	Rpm	Bar	Psi	Lt	Gal	Kg	Lbs
Hydraulic	8.00 » 14.00	2.14 » 3.69	1450	200	2900	0.4	0.1	7.9	18.73

Mazzoni S.r.l. - Via Prati Vecchi 5 - 4025 Cavriago (RE) - Italy | www.e-mazzoni.it | info@e-mazzoni.it

PMD-HY

液压马达 / HYDRAULIC MOTOR

代码 Code	型号 Model	流量 / Flow Rate l/min - gpm 1450 rpm		压力 / Pressure Bar	Psi	功率 / Power HP	Kw	轴 / Shaft SAE A - Cilindrico / Cylindrical Ø 15.9mm / 0.626''
P3.010.201	**PMD8200R-HY**	8,5	*2,24*	200	*2900*	4,42	3,3	右 / Right
P3.010.202	**PMD10200R-HY**	10	*2,64*	200	*2900*	5,19	3,87	右 / Right
P3.010.203	**PMD11200R-HY**	11	*2,91*	200	*2900*	5,71	4,26	右 / Right
P3.010.204	**PMD12200R-HY**	12	*3,17*	200	*2900*	6,23	4,65	右 / Right
P3.010.205	**PMD13200R-HY**	13	*3,43*	200	*2900*	6,75	5,03	右 / Right
P3.010.206	**PMD14200R-HY**	14	*3,7*	200	*2900*	7,27	5,42	右 / Right
P3.010.207	**PMD15200R-HY**	15	*3,96*	200	*2900*	7,79	5,81	右 / Right
P3.010.208	**PMD8200L-HY**	8,5	*2,24*	200	*2900*	4,42	3,3	左 / Left
P3.010.209	**PMD10200L-HY**	10	*2,64*	200	*2900*	5,19	3,87	左 / Left
P3.010.210	**PMD11200L-HY**	11	*2,91*	200	*2900*	5,71	4,26	左 / Left
P3.010.211	**PMD12200L-HY**	12	*3,17*	200	*2900*	6,23	4,65	左 / Left
P3.010.212	**PMD13200L-HY**	13	*3,43*	200	*2900*	6,75	5,03	左 / Left
P3.010.213	**PMD14200L-HY**	14	*3,7*	200	*2900*	7,27	5,42	左 / Left
P3.010.214	**PMD15200L-HY**	15	*3,96*	200	*2900*	7,79	5,81	左 / Left

备件 / SPARE PARTS

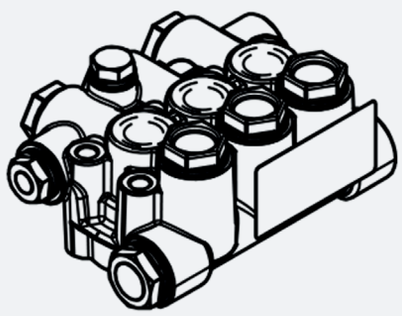

KIT - P9.040.002

泵头组件

COMPLETE HEAD OF THE PUMP

KIT - P9.039.001

油封

KIT OIL SEAL PUMP MM PM

KIT - P9.003.003

柱塞密封垫圈

KIT PLUNGER SEALS

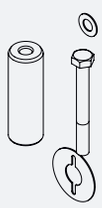

KIT - P9.004.023

陶瓷柱塞

KIT CERAMIC PISTON

KIT - P9.001.002

阀组件

COMPLETE VALVE

KIT - P9.003.004

密封组件

KIT COMPLETE SEALS

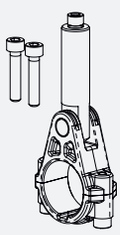

KIT - P9.041.008

预装配连接杆

PREASSEMBLED CONNECTING ROD

PM-EDM-E3/E4

汽油发动机 / *GASOLINE ENGINE*

最高进水温度 MAX INPUT WATER TEMPERATURE	最低输入压力 MINIMAL INPUT PRESSURE	进水 INLET	出水 OUTLET
65°C ***149° F***	**0.2 BAR** **2.9 PSI**	**G 1/2"**	**G 3/8"**

PM-EDM E3
SAE J1609A E3
Ø 19.05mm / 0.75''

PM-EDM E4
SAE J1609A E4
Ø 25.40mm / 1''

PM-EDM	流量 FLOW RATE		转速 ROUNDS	最高压力 MAX PRESSURE		机油容量 OIL CAPACITY		净重 WEIGHT	
	L/min	Gpm	Rpm	Bar	Psi	Lt	Gal	Kg	Lbs
E3	8.50 » 13.00	2.24 » 3.00	3400	200	2900	0.4	0.1	8.2	18.07
E4	8.50 » 15.00	2.24 » 3.96	3400	250	3625	0.4	0.1	8.8	19.40

Mazzoni S.r.l. - Via Prati Vecchi 5 - 4025 Cavriago (RE) - Italy | www.e-mazzoni.it | info@e-mazzoni.it

PM-EDM-E3/E4

汽油发动机 / GASOLINE ENGINE

代码 Code	型号 Model	流量 / Flow Rate l/min - gpm 3400 rpm		压力 / Pressure Bar	Psi	功率 / Power HP	Kw	轴 / Shaft SAE J1609A E3 Ø 19.05mm / 0.75''
P3.010.301	**PM8200R-EDM-E3**	8.50	*2,24*	200.00	*2900*	4,42	3,30	右 / Right
P3.010.302	**PM11200R-EDM-E3**	11.00	*2,9*	200.00	*2900*	5,71	4,26	右 / Right
P3.010.303	**PM14200R-EDM-E3**	14.00	*3,7*	200.00	*2900*	7,27	5,42	右 / Right
P3.010.304	**PM8200L-EDM-E3**	8.50	*2,24*	200.00	*2900*	4,42	3,30	左 / Left
P3.010.305	**PM11200L-EDM-E3**	11.00	*2,9*	200.00	*2900*	5,71	4,26	左 / Left
P3.010.306	**PM14200L-EDM-E3**	14.00	*3,7*	200.00	*2900*	7,27	5,42	左 / Left

代码 Code	型号 Model	流量 / Flow Rate l/min - gpm 3400 rpm		压力 / Pressure Bar	Psi	功率 / Power HP	Kw	轴 / Shaft SAE J1609A E4 Ø 25.40mm / 1''
P3.010.307	**PM8200R-EDM-E4**	8.50	*2,24*	200.00	*2900*	4,42	3,30	右 / Right
P3.010.308	**PM10200R-EDM-E4**	10.00	*2,64*	200.00	*2900*	5,19	3,87	右 / Right
P3.010.309	**PM11200R-EDM-E4**	11.50	*3,03*	200.00	*2900*	5,97	4,45	右 / Right
P3.010.310	**PM14200R-EDM-E4**	14.00	*3,7*	200.00	*2900*	7,27	5,42	右 / Right
P3.010.311	**PM15200R-EDM-E4**	15.00	*3,96*	200.00	*2900*	7,79	5,81	右 / Right
P3.010.312	**PM8200L-EDM-E4**	8.50	*2,24*	200.00	*2900*	4,42	3,30	左 / Left
P3.010.313	**PM10200L-EDM-E4**	10.00	*2,64*	200.00	*2900*	5,19	3,87	左 / Left
P3.010.314	**PM11200L-EDM-E4**	11.50	*3,03*	200.00	*2900*	5,97	4,45	左 / Left
P3.010.315	**PM14200L-EDM-E4**	14.00	*3,7*	200.00	*2900*	7,27	5,42	左 / Left
P3.010.316	**PM15200L-EDM-E4**	15.00	*3,96*	200.00	*2900*	7,79	5,81	左 / Left

备件 / SPARE PARTS

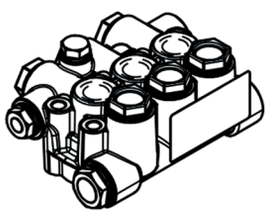

KIT - P9.040.034

泵头组件

COMPLETE HEAD OF THE PUMP

KIT - P9.003.051

密封组件

KIT COMPLETE SEALS

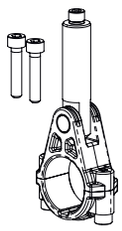

KIT - P9.041.008

预装配连接杆

PREASSEMBLED CONNECTING ROD

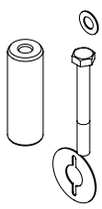

KIT - P9.004.021

陶瓷柱塞14

KIT CERAMIC PISTON - DIAMETER 14

KIT - P9.003.050

柱塞密封垫圈

KIT PLUNGER SEALS

KIT - P9.039.001

油封

KIT OIL SEAL PUMP MM PM

KIT - P9.001.002

阀组件

COMPLETE VALVE

高压泵
HIGH PRESSURE PUMPS

PMD

	转速 *RPM*	流量 *FLOW RATE*	最高压力 *MAX PRESSURE*	最高进水温度 *MAX INPUT WATER TEMPERATURE*
50 Hz	1450	8.50 - 15.00 l/min	200 Bar 2900 Psi	65°C 149° F
		2.24 - 3.96 gpm		
60Hz	1740	10.20 - 18.00 l/min		
		2.69 - 4.75 gpm		

PMD-CW

镀镍歧管 / *Nickel-plated manifold*

	转速 *RPM*	流量 *FLOW RATE*	最高压力 *MAX PRESSURE*	最高进水温度 *MAX INPUT WATER TEMPERATURE*
50 Hz	1450	8.50 - 15.00 l/min	200 Bar 2900 Psi	65°C 149° F
		2.24 - 3.96 gpm		
60Hz	1740	10.20 - 18.00 l/min		
		2.69 - 4.75 gpm		

TPMD

镀镍歧管 / *Nickel-plated manifold*

	转速 *RPM*	流量 *FLOW RATE*	最高压力 *MAX PRESSURE*	最高进水温度 *MAX INPUT WATER TEMPERATURE*
50 Hz	1450	8.50 - 15.00 l/min	150 Bar 2175 Psi	**85°C 185° F**
		2.24 - 3.96 gpm		
60Hz	1740	10.20 - 18.00 l/min		
		2.69 - 4.75 gpm		

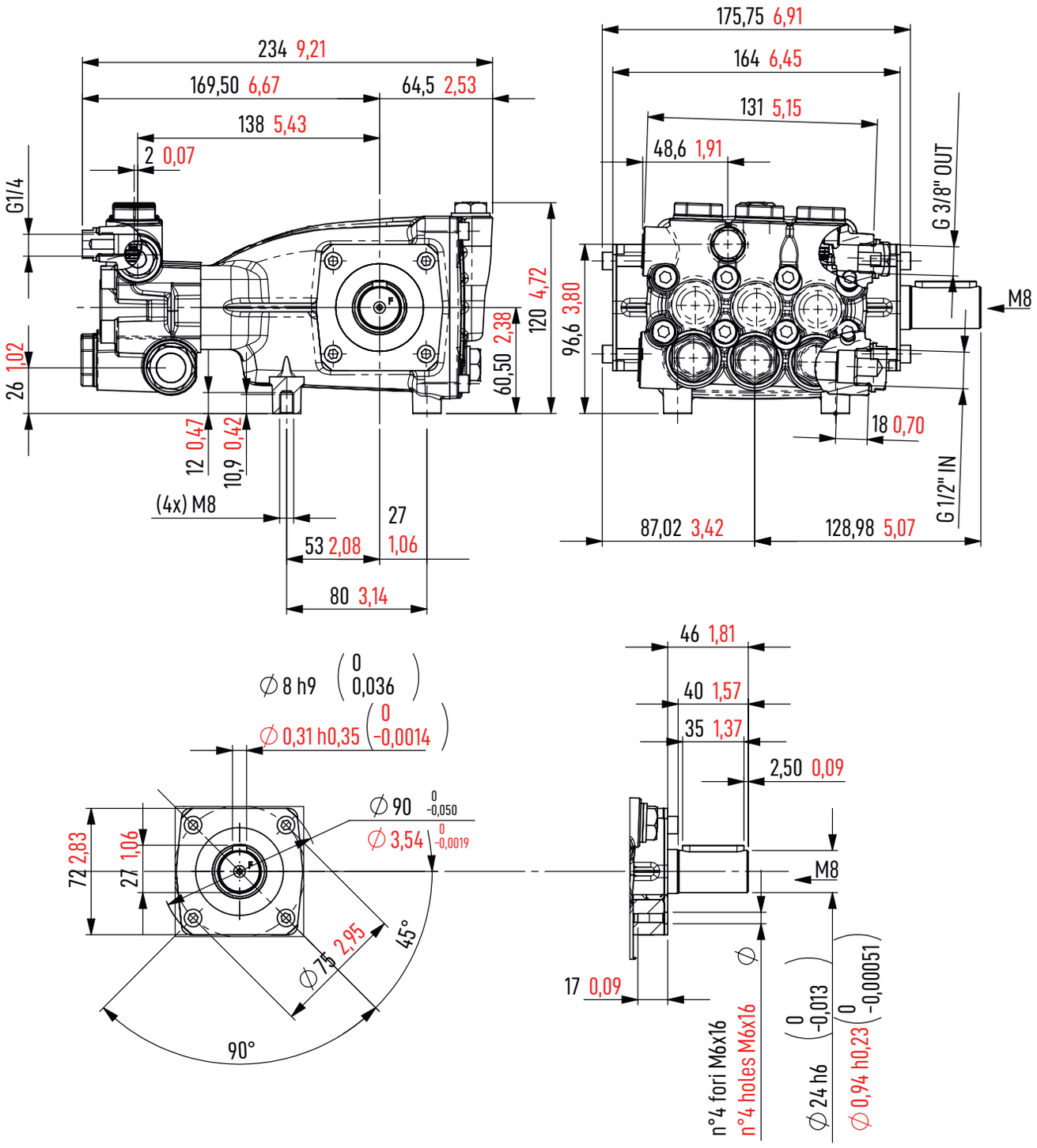

单位 / *UNITS OF MEASUREMENT*

● mm ● inch

PMD-HY | SAE A

马达类型 *ENGINE TYPE*	流量 *FLOW RATE*	最高压力 *MAX PRESSURE*	最高进水温度 *MAX INPUT WATER TEMPERATURE*
液压马达 *HYDRAULIC MOTOR*	8.00 - 14.00 l/min 2.14 - 3.69 gpm	200 Bar 2900 Psi	65°C 149° F

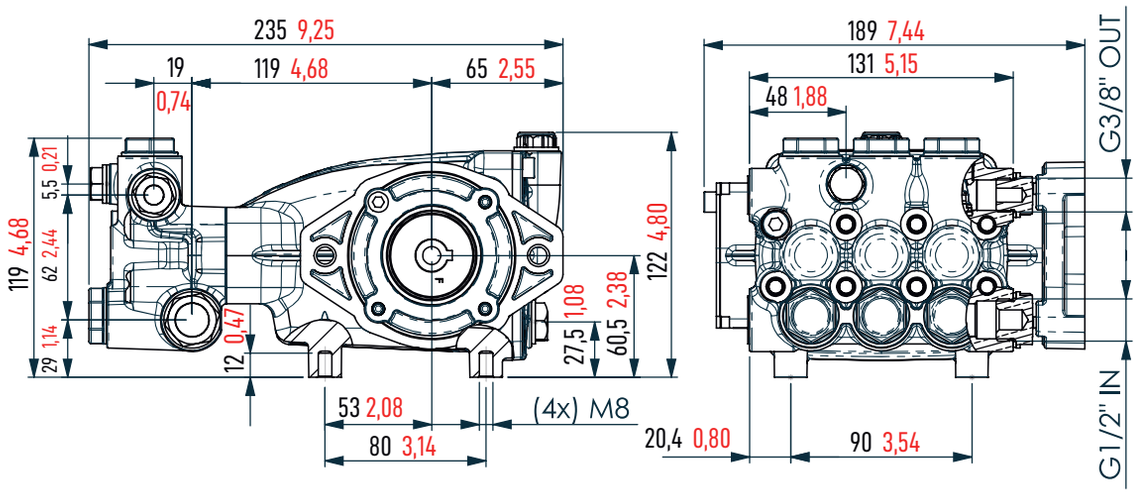

DETAILED FLANGE VIEW
法兰详图

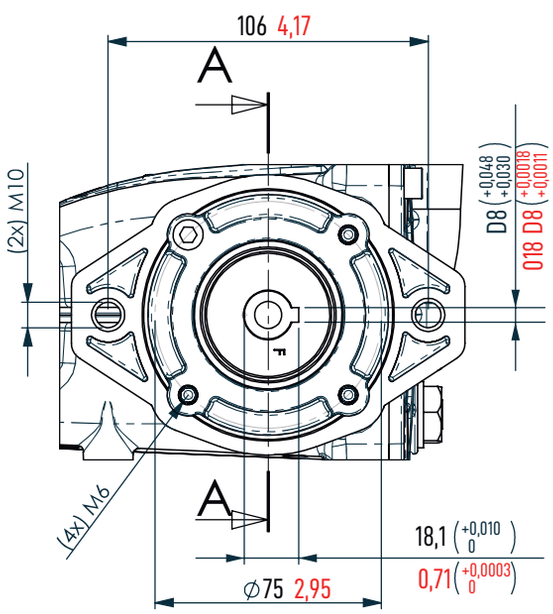

DETAILED SHAFT VIEW
轴视图

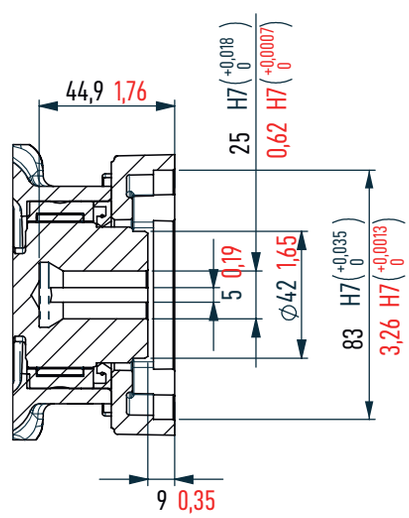

单位 / *UNITS OF MEASUREMENT*

● mm ● inch

PM-EDM

PM-EDM

马达类型 ENGINE TYPE		流量 FLOW RATE	最高压力 MAX PRESSURE	最高进水温度 MAX INPUT WATER TEMPERATURE
汽油马达 FUEL MOTOR	E3	8.50 - 13.00 l/min	200 Bar	65°C 149° F
		2.24 - 3.00 gpm	2900 Psi	
	E4	8.50 - 15.00 l/min	200 Bar	
		2.24 - 3.96 gpm	2900 Psi	

PM-EDM E3 | SAE J1609A

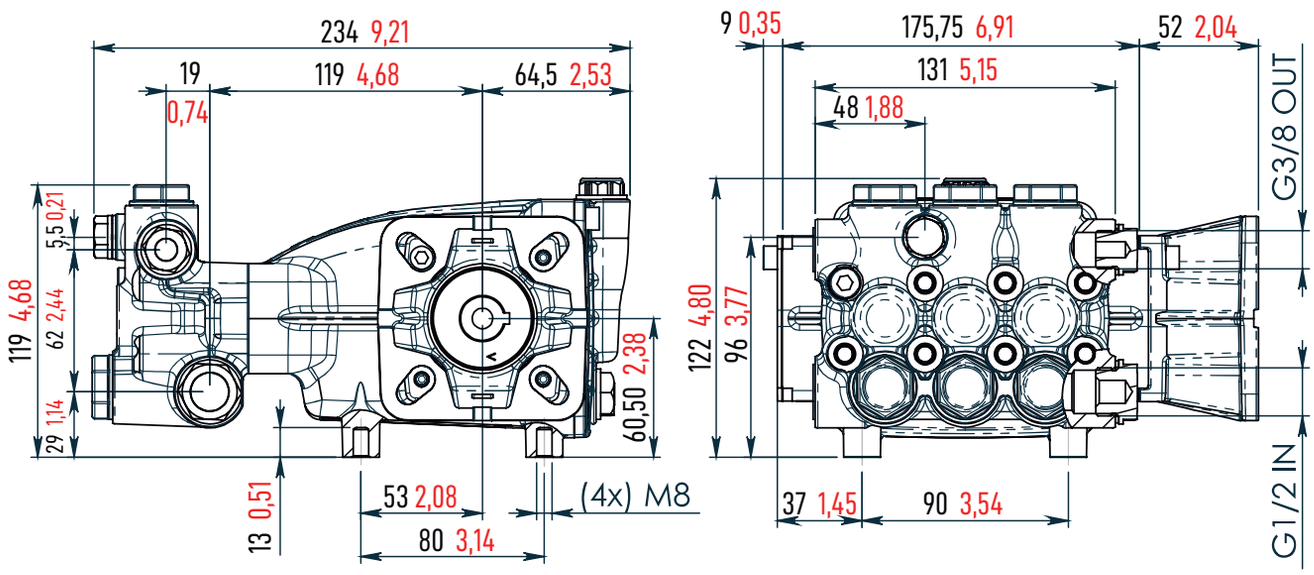

PM-EDM E4 | SAE J1609A

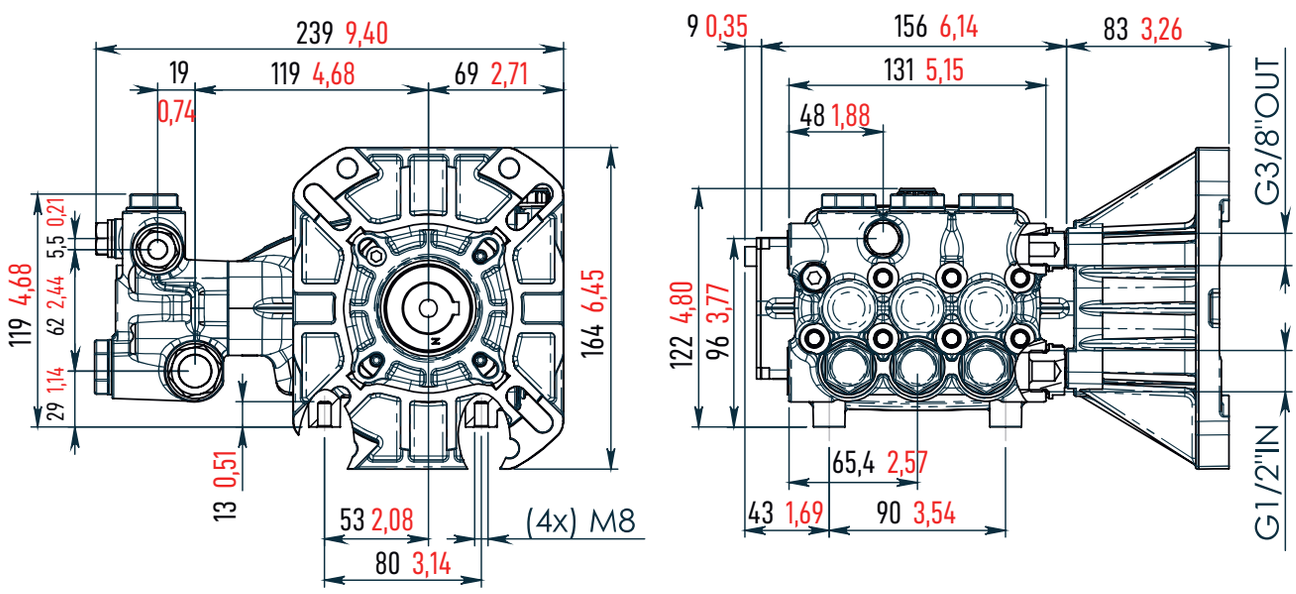

单位 / *UNITS OF MEASUREMENT*

● mm ● inch

MMD SERIES

MMD

MMD-CW

TMM

MMX

MMD-HY

MMD-EDM E4

MMD

最高进水温度 MAX INPUT WATER TEMPERATURE	最低输入压力 MINIMAL INPUT PRESSURE	进水 INLET	出水 OUTLET
65°C 149° F	0.2 BAR 2.9 PSI	G 1/2"	G 3/8"

MMD	流量 FLOW RATE		转速 ROUNDS	最高压力 MAX PRESSURE		机油容量 OIL CAPACITY		净重 WEIGHT	
	L/min	Gpm	Rpm	Bar	Psi	Lt	Gal	Kg	Lbs
50HZ	12.00 » 21.00	2.24 » 5.54	1450	250	3625	0.7	0.18	10.4	22.92
	15.00	3.96	1000						
60Hz	14.40 » 25.20	2.69 » 6.65	1740						
	18.00	4.75	1200						

Mazzoni S.r.l. - Via Prati Vecchi 5 - 4025 Cavriago (RE) - Italy | www.e-mazzoni.it | info@e-mazzoni.it

MMD

代码 Code	型号 Model	流量 / Flow Rate l/min - gpm 1450 rpm		1740 rpm		压力 / Pressure Bar	Psi	功率 / Power 50Hz HP	Kw	功率 / Power 60Hz HP	Kw	轴 Shaft L: 40mm Ø 24
P3.020.003-2	**MMD12250R**	12.00	*3.17*	14.40	*3.80*	250.00	3625	7,79	5,81	9,35	6,97	右 / *Right*
P3.020.002 -2	**MMD15250R**	15.00	*3.96*	18.00	*4.75*	250.00	3625	9,74	7,26	11,69	8,72	右 / *Right*
P3.020.004 -2	**MMD18250R**	18.00	*4.75*	21.60	*5.70*	250.00	3625	11,69	8,72	14,03	10,46	右 / *Right*
P3.020.001 -2	**MMD21250R**	21.00	*5.55*	25.20	*6.65*	250.00	3625	13,64	10,17	16,36	12,20	右 / *Right*
P3.020.008 -2	**MMD12250L**	12.00	*3.17*	14.40	*3.80*	250.00	3625	7,79	5,81	9,35	6,97	左 / *Left*
P3.020.006 -2	**MMD15250L**	15.00	*3.96*	18.00	*4.75*	250.00	3625	9,74	7,26	11,69	8,72	左 / *Left*
P3.020.009 -2	**MMD18250L**	18.00	*4.75*	21.60	*5.70*	250.00	3625	11,69	8,72	14,03	10,46	左 / *Left*
P3.020.007 -2	**MMD21250L**	21.00	*5.55*	25.20	*6.65*	250.00	3625	13,64	10,17	16,36	12,20	左 / *Left*
		1000 rpm		**1200 rpm**		**Bar**	**Psi**	**HP**	**Kw**	**HP**	**Kw**	
P3.020.005 -2	**MMD15250R**	15.00	*3.96*	18.00	*4.75*	250.00	3625	9,74	7,26	11,69	8,72	右 / *Right*
P3.020.010 -2	**MMD15250L**	15.00	*3.96*	18.00	*4.75*	250.00	3625	9,74	7,26	11,69	8,72	左 / *Left*

备件 / *SPARE PARTS*

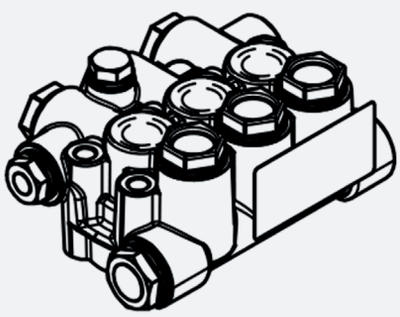

KIT - P9.040.017

泵头组件

COMPLETE HEAD OF THE PUMP

KIT - P9.039.001

油封

KIT OIL SEAL PUMP MM PM

KIT - P9.003.025

柱塞密封垫圈

KIT PLUNGER SEALS

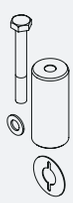

KIT - P9.004.013

陶瓷柱塞20

KIT CERAMIC PISTON - DIAMETER 20

KIT - P9.001.005

阀组件

COMPLETE VALVE

KIT - P9.003.026

密封组件

KIT COMPLETE SEALS

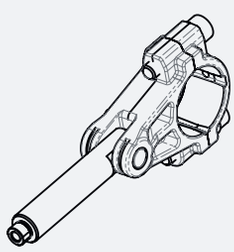

KIT - P9.041.004

预装配连接杆

PREASSEMBLED CONNECTING ROD

MMD-CW

汽车清洗 / CAR WASH

最高进水温度 MAX INPUT WATER TEMPERATURE	最低输入压力 MINIMAL INPUT PRESSURE	进水 INLET	出水 OUTLET	镀镍歧管 NICKEL PLATED MANIFOLD
65°C 149° F	0.2 BAR 2.9 PSI	G 1/2"	G 3/8"	

MMD-CW CAR WASH	流量 FLOW RATE		转速 ROUNDS	最高压力 MAX PRESSURE		机油容量 OIL CAPACITY		净重 WEIGHT	
	L/min	Gpm	Rpm	Bar	Psi	Lt	Gal	Kg	Lbs
50HZ	12.00 » 21.00	2.24 » 5.54	1450	250	3625	0.7	0.18	10.4	22.92
60Hz	14.40 » 25.20	2.69 » 6.65	1740						

Mazzoni S.r.l. - Via Prati Vecchi 5 - 4025 Cavriago (RE) - Italy | www.e-mazzoni.it | info@e-mazzoni.it

MMD-CW

汽车清洗 / CAR WASH

代码 Code	型号 Model	流量 / Flow Rate l/min - gpm 1450 rpm		1740 rpm		压力 / Pressure Bar	Psi	功率 / Power 50Hz HP	Kw	功率 / Power 60Hz HP	Kw	轴 Shaft L: 40mm Ø 24
P3.022.001-2	**MM12250 R**	12.00	*3.17*	14,4	*3,80*	250.00	3625	7,79	5,81	9,35	6,97	右 / *Right*
P3.022.002-2	**MM15250 R**	15.00	*3.96*	18	*4,76*	250.00	3625	9,74	7,26	11,69	8,72	右 / *Right*
P3.022.003-2	**MM18250 R**	18.00	*4.75*	21,6	*5,71*	250.00	3625	11,69	8,72	14,03	10,46	右 / *Right*
P3.022.004-2	**MM21250 R**	21.00	*5.55*	25,2	*6,66*	250.00	3625	13,64	10,17	16,36	12,20	右 / *Right*
P3.022.005-2	**MM12250 L**	12.00	*3.17*	14,4	*3,80*	250.00	3625	7,79	5,81	9,35	6,97	左 / *Left*
P3.022.006-2	**MM15250 L**	15.00	*3.96*	18	*4,76*	250.00	3625	9,74	7,26	11,69	8,72	左 / *Left*
P3.022.007-2	**MM18250 L**	18.00	*4.75*	21,6	*5,71*	250.00	3625	11,69	8,72	14,03	10,46	左 / *Left*
P3.022.008-2	**MM21250 L**	21.00	*5.55*	25,2	*6,66*	250.00	3625	13,64	10,17	16,36	12,20	左 / *Left*
		1000 rpm		**1200 rpm**		**Bar**	**Psi**	**HP**	**Kw**	**HP**	**Kw**	
P3.022.009-2	**MM15250 R**	15.00	*3.96*	18.00	*4.75*	250.00	3625	9,74	7,26	11,69	8,72	右 / *Right*
P3.022.010-2	**MM15250 L**	15.00	*3.96*	18.00	*4.75*	250.00	3625	9,74	7,26	11,69	8,72	左 / *Left*

备件 / *SPARE PARTS*

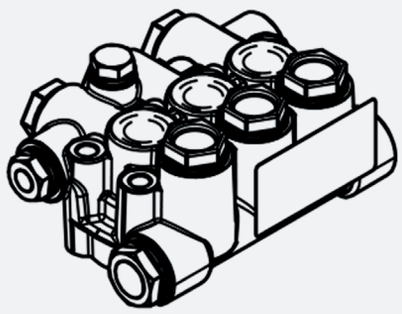

KIT - P9.040.018

泵头组件

COMPLETE HEAD OF THE PUMP

KIT - P9.039.001

油封

KIT OIL SEAL PUMP MM PM

KIT - P9.003.053

柱塞密封垫圈

KIT PLUNGER SEALS

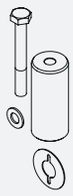

KIT - P9.004.013

陶瓷柱塞20

KIT CERAMIC PISTON DIAMETER 20

KIT - P9.001.005

阀组件

COMPLETE VALVE

KIT - P9.003.054

密封组件

KIT COMPLETE SEALS

KIT - P9.041.004

预装配连接杆

PREASSEMBLED CONNECTING ROD

TMM

高温 / HIGH TEMPERATURE

最高进水温度 MAX INPUT WATER TEMPERATURE	最低输入压力 MINIMAL INPUT PRESSURE	进水 INLET	出水 OUTLET	镀镍歧管 NICKEL PLATED MANIFOLD
85°C 185° F	3 BAR 43.51 PSI	G 1/2"	G 3/8"	

TMM HIGH TEMPERATURE	流量 FLOW RATE		转速 ROUNDS	最高压力 MAX PRESSURE		机油容量 OIL CAPACITY		净重 WEIGHT	
	L/min	Gal/min	Rpm	Bar	Psi	Lt	Gal	Kg	Lbs
50HZ	12.00 » 21.00	2.25 » 5.54	1450	200	2900.75	0.7	0.18	10.4	22.92
60Hz	14.40 » 25.20	2.69 » 6.65	1740						

Mazzoni S.r.l. - Via Prati Vecchi 5 - 4025 Cavriago (RE) - Italy | www.e-mazzoni.it | info@e-mazzoni.it

TMM

高温 / HIGH TEMPERATURE

代码 Code	型号 Model	流量 / Flow Rate l/min - gpm 1450 rpm		1740 rpm		压力 / Pressure Bar	Psi	功率 / Power 50Hz HP	Kw	功率 / Power 60Hz HP	Kw	轴 Shaft L: 40mm Ø 24
P3.021.003-2	**TMM12200R**	12.00	*3.17*	14,4	*3.80*	200	2900.75	6,23	4,65	7,48	5,58	右 / *Right*
P3.021.002-2	**TMM15200R**	15.00	*3.96*	18	*4.76*	200	2900.75	7,79	5,81	9,35	6,97	右 / *Right*
P3.021.004-2	**TMM18200R**	18.00	*4.75*	21,6	*5.71*	200	2900.75	9,35	6,97	11,22	8,37	右 / *Right*
P3.021.001-2	**TMM21200R**	21.00	*5.55*	25,2	*6.66*	200	2900.75	10,91	8,14	13,09	9,76	右 / *Right*
P3.021.008-2	**TMM12200L**	12.00	*3.17*	14.40	*3.80*	200	2900.75	6,23	4,65	7,48	5,58	左 / *Left*
P3.021.006-2	**TMM15200L**	15.00	*3.96*	18.00	*4.75*	200	2900.75	7,79	5,81	9,35	6,97	左 / *Left*
P3.021.009-2	**TMM18200L**	18.00	*4.75*	21.60	*5.70*	200	2900.75	9,35	6,97	11,22	8,37	左 / *Left*
P3.021.007-2	**TMM21200 L**	21.00	*5.55*	25.20	*6.65*	200	2900.75	10,91	8,14	13,09	9,76	左 / *Left*
		1000 rpm		**1200 rpm**		**Bar**	**Psi**	**HP**	**Kw**	**HP**	**Kw**	
P3.021.005-2	**TMM15200R**	15.00	*3.96*	18.00	*4.75*	200	2900.75	7,79	5,81	9,35	6,97	右 / *Right*
P3.020.010-2	**TMM15200L**	15.00	*3.96*	18.00	*4.75*	200	2900.75	7,79	5,81	9,35	6,97	左 / *Left*

备件 / *SPARE PARTS*

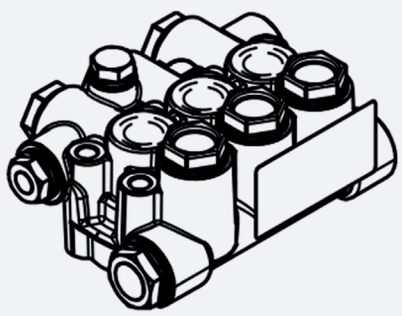

KIT - P9.040.019

泵头组件

COMPLETE HEAD OF THE PUMP

KIT - P9.039.001

油封

KIT OIL SEAL PUMP MM PM

KIT - P9.003.017

柱塞密封垫圈

KIT PLUNGER SEALS

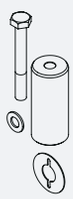

KIT - P9.004.013

陶瓷柱塞20

KIT CERAMIC PISTON DIAMETER 20

KIT - P9.001.005

阀组件

COMPLETE VALVE

KIT - P9.003.027

密封组件

KIT COMPLETE SEALS

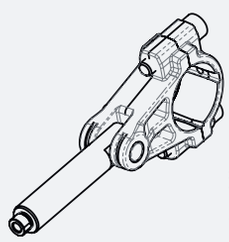

KIT - P9.041.004

预装配连接杆

PREASSEMBLED CONNECTING ROD

MMX

最高进水温度 MAX INPUT WATER TEMPERATURE	最低输入压力 MINIMAL INPUT PRESSURE	进水 INLET	出水 OUTLET	不锈钢歧管 STAINLESS STEEL HEAD
85°C *185° F*	3 BAR 43.51 PSI	G 1/2"	G 3/8"	

不锈钢 AISI316
AISI316 Stainless Steel

MMX	流量 FLOW RATE		转速 ROUNDS	最高压力 MAX PRESSURE		机油容量 OIL CAPACITY		净重 WEIGHT	
	L/min	Gpm	Rpm	Bar	Psi	Lt	Gal	Kg	Lbs
50HZ	12.00 » 21.00	2.24 » 5.54	1450	200	2900.75	0.7	0.18	10.4	22.92
60Hz	14.40 » 25.20	2.69 » 6.65	1740						

Mazzoni S.r.l. - Via Prati Vecchi 5 - 4025 Cavriago (RE) - Italy | www.e-mazzoni.it | info@e-mazzoni.it

MMX

代码 Code	型号 Model	流量 / Flow Rate l/min - gpm 1450 rpm		1740 rpm		压力 / Pressure Bar	Psi	功率 / Power 50Hz HP	Kw	功率 / Power 60Hz HP	Kw	轴 Shaft L: 40mm Ø 24
P3.023.003	**MMX12200 R**	12.00	*3.17*	14,4	*3,80*	200.00	2900.75	6,23	4,65	7,48	5,58	右 / *Right*
P3.023.002	**MMX15200 R**	15.00	*3.96*	18	*4,76*	200.00	2900.75	7,79	5,81	9,35	6,97	右 / *Right*
P3.023.004	**MMX18200 R**	18.00	*4.75*	21,6	*5,71*	200.00	2900.75	9,35	6,97	11,22	8,37	右 / *Right*
P3.023.001	**MMX21200 R**	21.00	*5.55*	25,2	*6,66*	200.00	2900.75	10,91	8,14	13,09	9,76	右 / *Right*
P3.023.008	**MMX12200 L**	12.00	*3.17*	14.40	*3.80*	200.00	2900.75	6,23	4,65	7,48	5,58	左 / *Left*
P3.023.006	**MMX15200 L**	15.00	*3.96*	18.00	*4.75*	200.00	2900.75	7,79	5,81	9,35	6,97	左 / *Left*
P3.023.009	**MMX18200 L**	18.00	*4.75*	21.60	*5.70*	200.00	2900.75	9,35	6,97	11,22	8,37	左 / *Left*
P3.023.007	**MMX21200 L**	21.00	*5.55*	25.20	*6.65*	200.00	2900.75	10,91	8,14	13,09	9,76	左 / *Left*
		1000 rpm		**1200 rpm**		**Bar**	**Psi**	**HP**	**Kw**	**HP**	**Kw**	
P3.023.005	**MMX15200 R**	15.00	*3.96*	18.00	*4.75*	200.00	2900.75	7,79	5,81	9,35	6,97	右 / *Right*
P3.023.010	**MMX15200L**	15.00	*3.96*	18.00	*4.75*	200.00	2900.75	7,79	5,81	9,35	6,97	左 / *Left*

备件 / *SPARE PARTS*

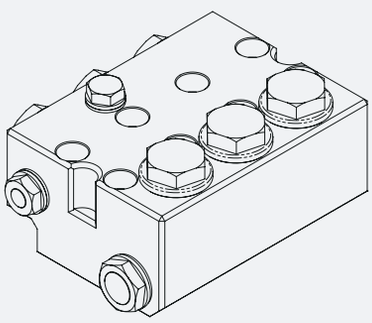

KIT - P9.040.032

泵头组件

COMPLETE HEAD OF THE PUMP

KIT - P9.039.001

油封

KIT OIL SEAL PUMP MM PM

KIT - P9.003.017

柱塞密封垫圈

KIT PLUNGER SEALS

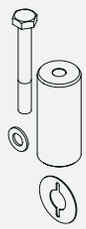

KIT - P9.004.015

陶瓷柱塞20

KIT CERAMIC PISTON DIAMETER 20

KIT - P9.001.011

阀组件

COMPLETE VALVE

KIT - P9.003.045

密封组件

KIT COMPLETE SEALS

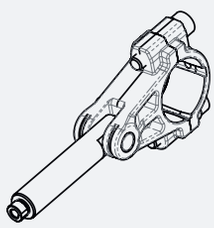

KIT - P9.041.004

预装配连接杆

PREASSEMBLED CONNECTING ROD

MMD-HY

液压马达 / HYDRAULIC MOTOR

最高进水温度 MAX INPUT WATER TEMPERATURE	最低输入压力 MINIMAL INPUT PRESSURE	进水 INLET	出水 OUTLET
65°C 149° F	0.2 BAR 2.9 PSI	G 1/2"	G 3/8"

MMD-HY	流量 FLOW RATE		转速 ROUNDS	最高压力 MAX PRESSURE		机油容量 OIL CAPACITY		净重 WEIGHT	
	L/min	Gpm	Rpm	Bar	Psi	Lt	Gal	Kg	Lbs
hydraulic	12.00 » 21.00	3.17 » 5.55	1450	250	3625	0.7	0.18	11.4	25.1

Mazzoni S.r.l. - Via Prati Vecchi 5 - 4025 Cavriago (RE) - Italy | www.e-mazzoni.it | info@e-mazzoni.it

MMD-HY

液压马达 / HYDRAULIC MOTOR

代码 Code	型号 Model	流量 / Flow Rate l/min - gpm 1450 rpm		压力 / Pressure Bar	Psi	功率 / Power HP	Kw	轴 / Shaft SAE A Cilindrico Ø 15.9mm / 0.626''
P3.020.201	**MMD12250R-HY**	12.00	*3.17*	250.00	*3625*	7,79	5,81	右 / Right
P3.020.202	**MMD15250R-HY**	15.00	*3.96*	250.00	*3625*	9,74	7,26	右 / Right
P3.020.203	**MMD18250R-HY**	18.00	*4.75*	250.00	*3625*	11,69	8,72	右 / Right
P3.020.204	**MMD21250R-HY**	21.00	*5.55*	250.00	*3625*	13,64	10,17	右 / Right
P3.020.205	**MMD12250L-HY**	12.00	*3.17*	250.00	*3625*	7,79	5,81	左 / Left
P3.020.206	**MMD15250L-HY**	15.00	*3.96*	250.00	*3625*	9,74	7,26	左 / Left
P3.020.207	**MMD18250L-HY**	18.00	*4.75*	250.00	*3625*	11,69	8,72	左 / Left
P3.020.208	**MMD21250L-HY**	21.00	*5.55*	250.00	*3625*	13,64	10,17	左 / Left

备件 / SPARE PARTS

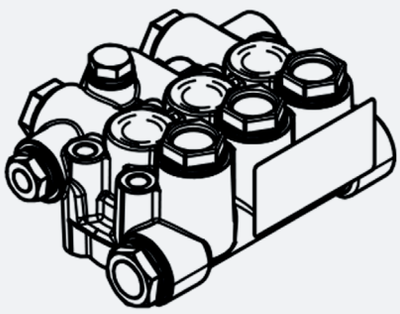

KIT - P9.040.017

泵头组件

COMPLETE HEAD OF THE PUMP

KIT - P9.039.001

油封

KIT OIL SEAL PUMP MM PM

KIT - P9.003.025

柱塞密封垫圈

KIT PLUNGER SEALS

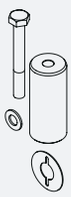

KIT - P9.004.013

陶瓷柱塞20

KIT CERAMIC PISTON - DIAMETER 20

KIT - P9.001.005

阀组件

COMPLETE VALVE

KIT - P9.003.026

密封组件

KIT COMPLETE SEALS

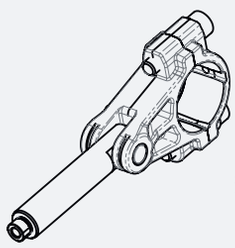

KIT - P9.041.004

预装配连接杆

PREASSEMBLED CONNECTING ROD

MMD-EDM

汽油发动机 / *GASOLINE ENGINE*

最高进水温度 MAX INPUT WATER TEMPERATURE	最低输入压力 MINIMAL INPUT PRESSURE	进水 INLET	出水 OUTLET
65°C *149° F*	0.2 BAR 2.9 PSI	G 1/2"	G 3/8"

MMD-EDM	流量 FLOW RATE		转速 ROUNDS	最高压力 MAX PRESSURE		机油容量 OIL CAPACITY		净重 WEIGHT	
	L/min	Gpm	Rpm	Bar	Psi	Lt	Gal	Kg	Lbs
endothermic	13.50 » 20.90	3.56 » 5.52	3400	275	4000	0.7	0.18	11.4	25.1

Mazzoni S.r.l. - Via Prati Vecchi 5 - 4025 Cavriago (RE) - Italy | www.e-mazzoni.it | info@e-mazzoni.it

MMD-EDM

汽油发动机 / GASOLINE ENGINE

代码 Code	型号 Model	流量 / Flow Rate l/min - gpm 3400 rpm		压力 / Pressure Bar	Psi	功率 / Power HP	Kw	轴 / Shaft SAE J1609A E4 Ø 25.4mm / 1''
P3.020.301	**MMD13200R-EDM-E4**	13.50	*3.56*	275.00	*4000*	7.01	*5.23*	右 / Right
P3.020.302	**MMD16200R-EDM-E4**	16.00	*4.22*	275.00	*4000*	8.31	*6.20*	右 / Right
P3.020.303	**MMD18200R-EDM-E4**	18.30	*4.83*	275.00	*4000*	9.51	*7.09*	右 / Right
P3.020.304	**MMD21200R-EDM-E4**	20.90	*5.52*	275.00	*4000*	10.86	*8.10*	右 / Right
P3.020.305	**MMD13200L-EDM-E4**	13.50	*3.56*	275.00	*4000*	7.01	*5.23*	左 / Left
P3.020.306	**MMD16200L-EDM-E4**	16.00	*4.22*	275.00	*4000*	8.31	*6.20*	左 / Left
P3.020.307	**MMD18200L-EDM-E4**	18.30	*4.83*	275.00	*4000*	9.51	*7.09*	左 / Left
P3.020.308	**MMD21200L-EDM-E4**	20.90	*5.52*	275.00	*4000*	10.86	*8.10*	左 / Left

备件 / SPARE PARTS

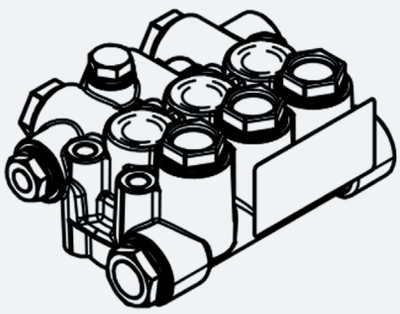

KIT - P9.040.033

泵头组件

COMPLETE HEAD OF THE PUMP

KIT - P9.039.001

油封

KIT OIL SEAL PUMP MM PM

KIT - P9.003.049

柱塞密封垫圈

KIT PLUNGER SEALS

KIT - P9.004.020

陶瓷柱塞 15

KIT CERAMIC PISTON - DIAMETER 15

KIT - P9.001.005

阀组件

COMPLETE VALVE

KIT - P9.003.048

密封组件

KIT COMPLETE SEALS

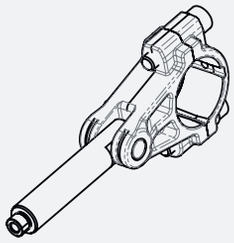

KIT - P9.041.004

预装配连接杆

PREASSEMBLED CONNECTING ROD

高压泵
HIGH PRESSURE PUMPS

MMD

	转速 *RPM*	流量 *FLOW RATE*	最高压力 *MAX PRESSURE*	最高进水温度 *MAX INPUT WATER TEMPERATURE*
50 Hz	1450	12.00 - 21.00 l/min	250 Bar 3625 Psi	65°C 149° F
		3.17 - 5.55 gpm		
	1000	15.00l/min - 3.96 gpm		
60Hz	1740	14.40 - 25.20 l/min		
		3.80 - 6.66 gpm		
	1200	18.00l/min - 4.75 gpm		

MMD-CW

镀镍歧管 / *Nickel-plated manifold*

	转速 *RPM*	流量 *FLOW RATE*	最高压力 *MAX PRESSURE*	最高进水温度 *MAX INPUT WATER TEMPERATURE*
50 Hz	1450	12.00 - 21.00 l/min	250 Bar 3625 Psi	65°C 149° F
		3.17 - 5.55 gpm		
	1000	15.00l/min - 3.96 gpm		
60Hz	1740	14.40 - 25.20 l/min		
		3.80 - 6.66 gpm		
	1200	18.00l/min - 4.75 gpm		

TMM

镀镍歧管 / *Nickel-plated manifold*

	转速 *RPM*	流量 *FLOW RATE*	最高压力 *MAX PRESSURE*	最高进水温度 *MAX INPUT WATER TEMPERATURE*
50 Hz	1450	12.00 - 21.00 l/min	200 Bar 2900 Psi	**85°C** **185° F**
		3.17 - 5.55 gpm		
	1000	15.00l/min - 3.96 gpm		
60Hz	1740	14.40 - 25.20 l/min		
		3.80 - 6.66 gpm		
	1200	18.00l/min - 4.75 gpm		

MMX

不锈钢歧管 / *Stainless steel head*

	转速 *RPM*	流量 *FLOW RATE*	最高压力 *MAX PRESSURE*	最高进水温度 *MAX INPUT WATER TEMPERATURE*
50 Hz	1450	12.00 - 21.00 l/min	200 Bar 2900 Psi	**85°C** **185° F**
		3.17 - 5.55 gpm		
	1000	15.00l/min - 3.96 gpm		
60Hz	1740	14.40 - 25.20 l/min		
		3.80 - 6.66 gpm		
	1200	18.00l/min - 4.75 gpm		

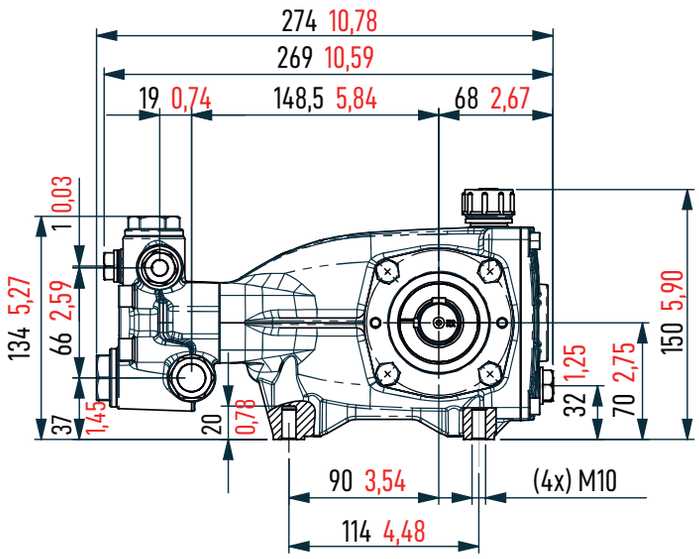

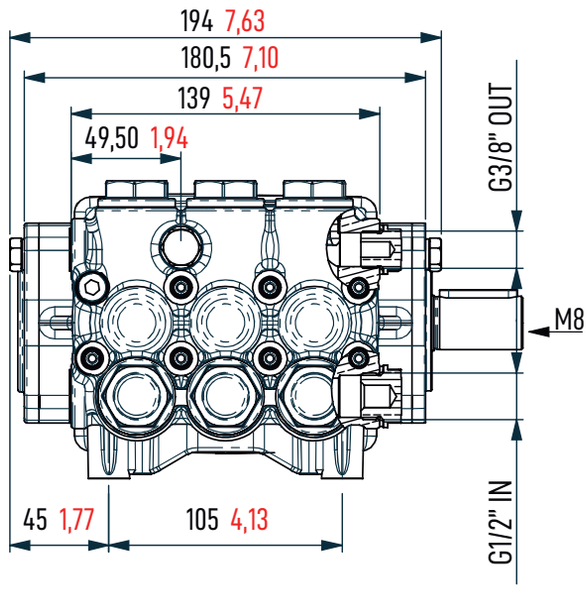

DETAILED FLANGE VIEW
法兰详图

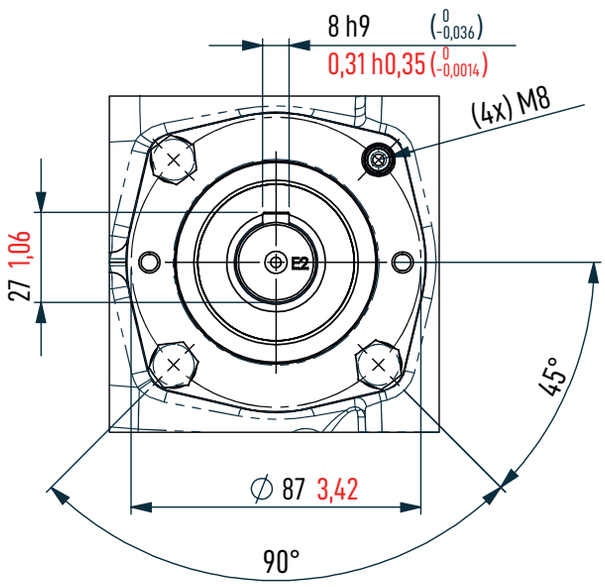

DETAILED SHAFT VIEW
轴视图

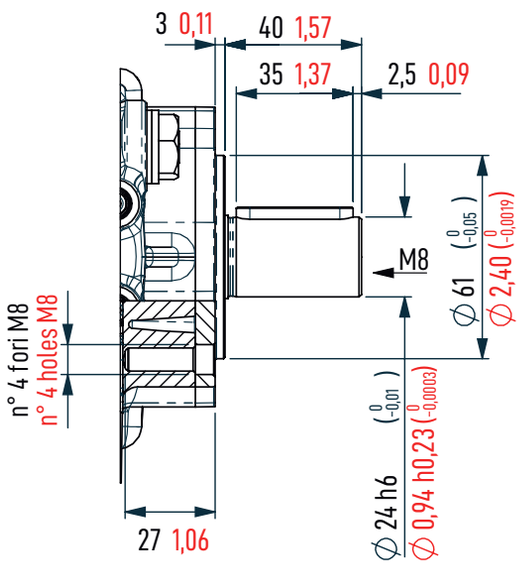

单位 / *UNITS OF MEASUREMENT*

● mm ● inch

MMD-HY | SAE A

马达类型 *ENGINE TYPE*	流量 *FLOW RATE*	最高压力 *MAX PRESSURE*	最高进水温度 *MAX INPUT WATER TEMPERATURE*
液压马达 *HYDRAULIC MOTOR*	12.00 - 21.00 l/min 3.15 - 5.55 gpm	250 Bar 3625 Psi	65°C 149° F

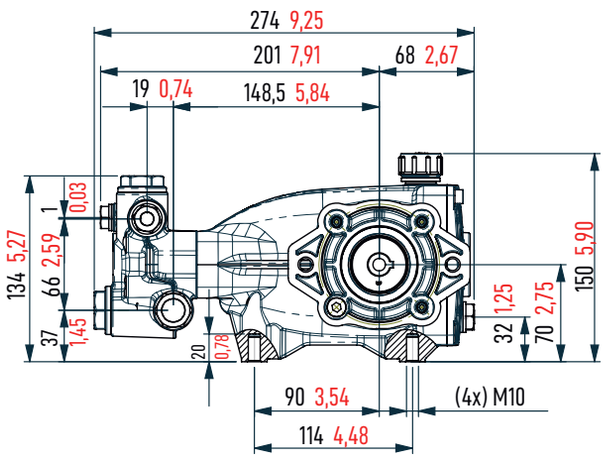

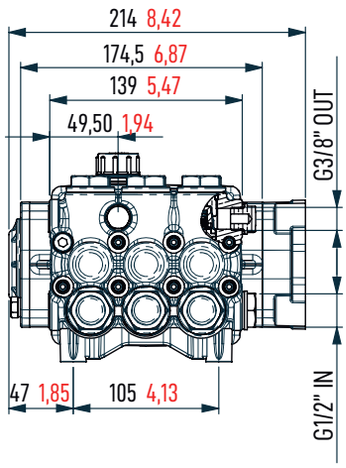

DETAILED FLANGE VIEW
法兰详图

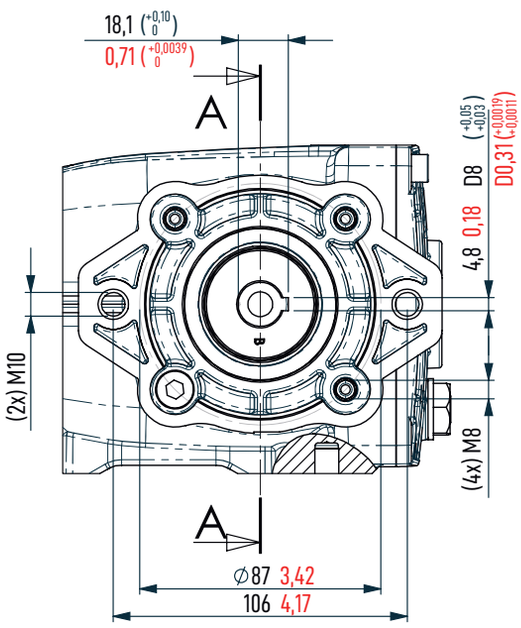

DETAILED SHAFT VIEW
轴视图

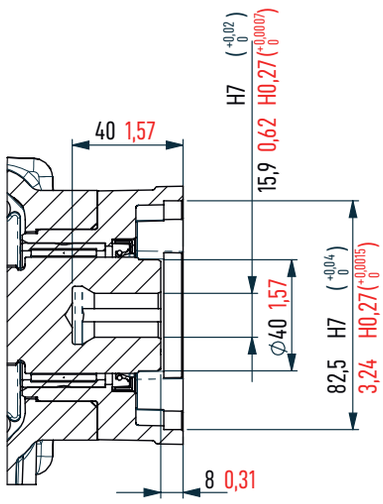

单位 / *UNITS OF MEASUREMENT*

● mm ● inch

MMD-EDM E4 | SAE J1609A

马达类型 *ENGINE TYPE*	流量 *FLOW RATE*	最高压力 *MAX PRESSURE*	最高进水温度 *MAX INPUT WATER TEMPERATURE*
汽油马达 *FUEL MOTOR*	13.50 - 20.90 l/min	275 Bar 4000 Psi	65°C 149° F
	3.65 - 5.55 gpm		

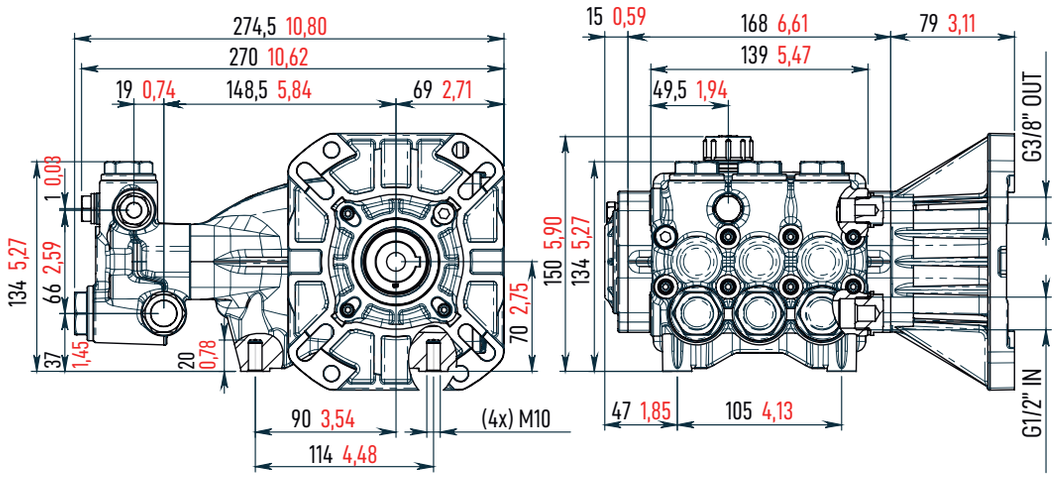

DETAILED FLANGE VIEW
法兰详图

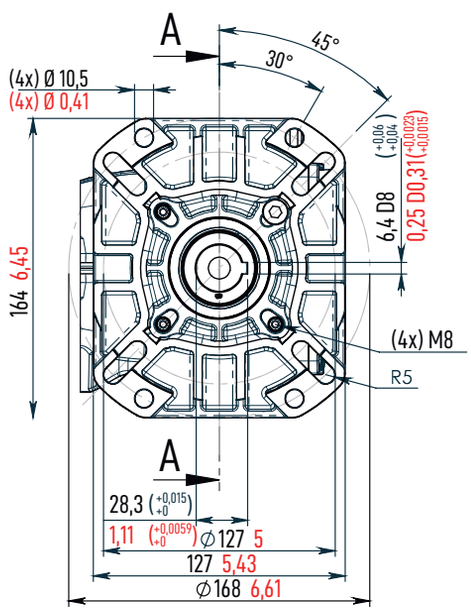

DETAILED SHAFT VIEW
轴视图

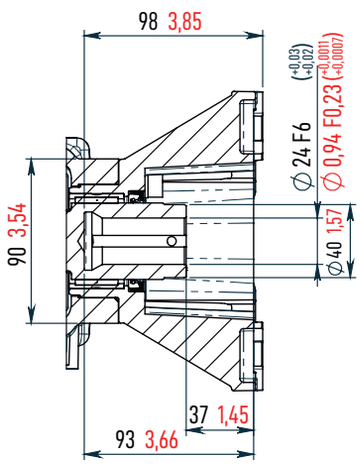

单位 / *UNITS OF MEASUREMENT*

● mm ● inch

GM SERIES

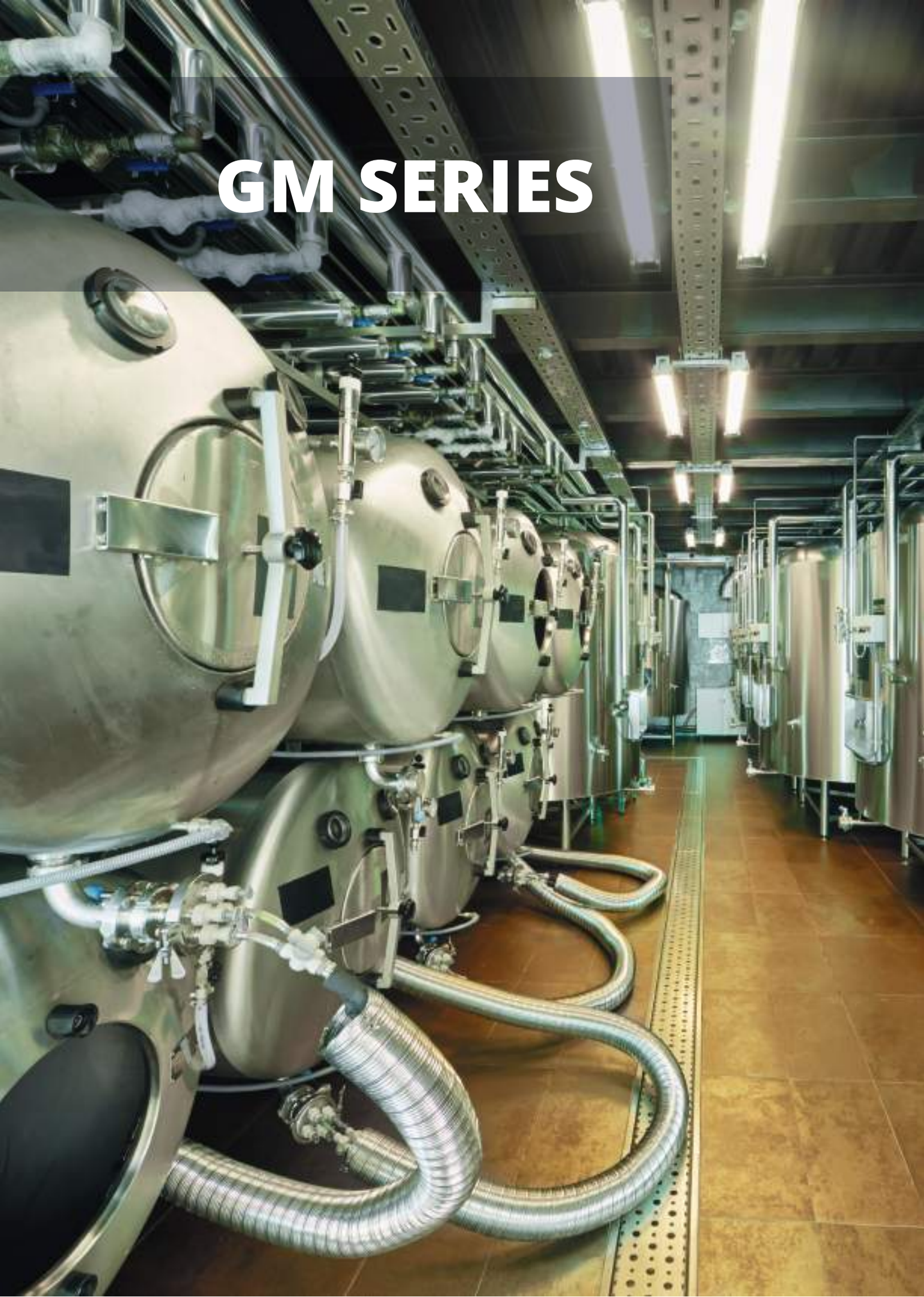

GM

GM-CW

TGM

GMX

GM

最高进水温度 MAX INPUT WATER TEMPERATURE	最低输入压力 MINIMAL INPUT PRESSURE		进水 INLET	出水 OUTLET
	< 50 lt	> 50 lt		
65°C 149° F	0.2 BAR	1 BAR	G 3/4"	G 1/2"
	2.9 PSI	14.5 PSI		

GM	流量 FLOW RATE		转速 ROUNDS	最高压力 MAX PRESSURE		机油容量 OIL CAPACITY		净重 WEIGHT	
	L/min	Gpm	Rpm	Bar	Psi	Lt	Gal	Kg	Lbs
50HZ	18.00 » 63.00	4.75 » 16.64	1450	300	4351.13	1.2	0.31	19	41.88
60Hz	21.60 » 75.60	5.70 » 19.97	1740						

Mazzoni S.r.l. - Via Prati Vecchi 5 - 4025 Cavriago (RE) - Italy | www.e-mazzoni.it | info@e-mazzoni.it

GM

代码 Code	型号 Model	流量 / Flow Rate l/min - gpm 1450 rpm		1740 rpm		压力 / Pressure Bar	Psi	功率 / Power 50Hz HP	Kw	功率 / Power 60Hz HP	Kw	轴 Shaft Ø: 24	柱塞直径 Ø Plunger
P3.030.001-1	**GM18300R**	18.00	*4,76*	21.60	*5,71*	300.00	4351.13	14.03	10.45	16.83	12.54	L: 45mm 右 / *Right*	20
P3.030.002-1	**GM22300R**	22.00	*5,81*	26.40	*6,97*	300.00	4351.13	17.14	12.77	20.57	15.33	L: 45mm 右 / *Right*	20
P3.030.003-1	**GM25300R**	25.00	*6,60*	30.00	*7,93*	300.00	4351.13	19.48	14.51	23.38	17.42	L: 45mm 右 / *Right*	20
P3.030.005-1	**GM27300R**	27.00	*7,13*	32.40	*8,56*	300.00	4351.13	21.04	15.67	25.25	18.81	L: 55mm 右 / *Right*	20
P3.030.006-1	**GM30250R**	30.00	*7,93*	36.00	*9,51*	250.00	3625.94	19.48	14.51	23.38	17.42	L: 45mm 右 / *Right*	22
P3.030.008-1	**GM33250R**	33.00	*8,72*	39.60	*10,46*	250.00	3625.94	21.43	15.96	25.71	19.16	L: 55mm 右 / *Right*	22
P3.030.009-1	**GM35170R**	35.00	*9,25*	42.00	*11,10*	170.00	2465.64	15.45	11.51	18.55	13.82	L: 45mm 右 / *Right*	25
P3.030.010-1	**GM40170R**	40.00	*10,57*	48.00	*12,68*	170.00	2465.64	17.66	13.16	21.19	15.79	L: 45mm 右 / *Right*	25
P3.030.012-1	**GM43170R**	43.00	*11,36*	51.60	*13,63*	170.00	2465.64	18.99	14.15	22.78	16.97	L: 55mm 右 / *Right*	25
P3.030.013-1	**GM50150R**	50.00	*13,21*	60.00	*15,85*	150.00	2175.57	19.48	14.51	23.38	17.42	L: 45mm 右 / *Right*	28
P3.030.014-1	**GM54150R**	54.00	*14,27*	64.80	*17,12*	150.00	2175.57	21.04	15.67	25.25	18.81	L: 55mm 右 / *Right*	28
P3.030.034-1	**GM63150R**	63.00	*16.64*	75.60	*19.97*	150.00	2175.57	24.54	18.30	29.45	21.96	L: 55mm 右 / *Right*	28
P3.030.015-1	**GM18300L**	18.00	*4,76*	21.60	*5,71*	300.00	4351.13	14.03	10.45	16.83	12.54	L: 45mm 左 / *Left*	20
P3.030.016-1	**GM22300L**	22.00	*5,81*	26.40	*6,97*	300.00	4351.13	17.14	12.77	20.57	15.33	L: 45mm 左 / *Left*	20
P3.030.017-1	**GM25300L**	25.00	*6,60*	30.00	*7,93*	300.00	4351.13	19.48	14.51	23.38	17.42	L: 45mm 左 / *Left*	20
P3.030.019-1	**GM27300L**	27.00	*7,13*	32.40	*8,56*	300.00	4351.13	21.04	15.67	25.25	18.81	L: 55mm 左 / *Left*	20
P3.030.020-1	**GM30250L**	30.00	*7,93*	36.00	*9,51*	250.00	3625.94	19.48	14.51	23.38	17.42	L: 45mm 左 / *Left*	22
P3.030.022-1	**GM33250L**	33.00	*8,72*	39.60	*10,46*	250.00	3625.94	21.43	15.96	25.71	19.16	L: 55mm 左 / *Left*	22
P3.030.023-1	**GM35170L**	35.00	*9,25*	42.00	*11,10*	170.00	2465.64	15.45	11.51	18.55	13.82	L: 45mm 左 / *Left*	25
P3.030.024-1	**GM40170L**	40.00	*10,57*	48.00	*12,68*	170.00	2465.64	17.66	13.16	21.19	15.79	L: 45mm 左 / *Left*	25
P3.030.026-1	**GM43170L**	43.00	*11,36*	51.60	*13,63*	170.00	2465.64	18.99	14.15	22.78	16.97	L: 55mm 左 / *Left*	25
P3.030.027-1	**GM50150L**	50.00	*13,21*	60.00	*15,85*	150.00	2175.57	19.48	14.51	23.38	17.42	L: 45mm 左 / *Left*	28
P3.030.028-1	**GM54150L**	54.00	*14,27*	64.80	*17,12*	150.00	2175.57	21.04	15.67	25.25	18.81	L: 55mm 左 / *Left*	28
P3.030.035-1	**GM63150L**	63.00	*16.64*	75.60	*19.97*	150.00	2175.57	24.54	18.30	29.45	21.96	L: 55mm 左 / *Left*	28

GM

备件 GM Ø20 / *SPARE PARTS GM Ø20*

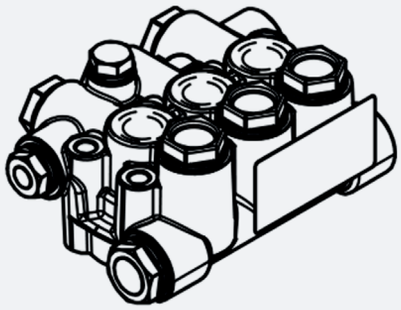

KIT - P9.040.009

泵头组件

COMPLETE HEAD OF THE PUMP

KIT - P9.039.002

油封

KIT OIL SEALS

KIT - P9.003.005

柱塞密封垫圈

KIT PLUNGER SEALS

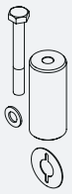

KIT - P9.004.009

陶瓷柱塞 20

KIT CERAMIC PISTON DIAMETER 20

KIT - P9.001.007

阀组件

COMPLETE VALVE

KIT - P9.003.019

密封组件

KIT COMPLETE SEALS

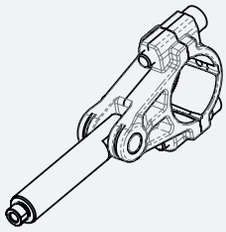

KIT - P9.041.005

预装配连接杆

PREASSEMBLED CONNECTING ROD

备件 GM Ø22 / *SPARE PARTS GM Ø22*

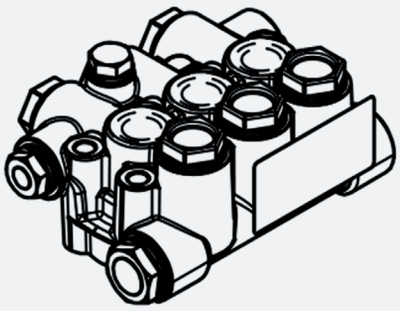

KIT - P9.040.010

泵头组件

COMPLETE HEAD OF THE PUMP

KIT - P9.039.002

油封

KIT OIL SEALS

KIT - P9.003.007

柱塞密封垫圈

KIT PLUNGER SEALS

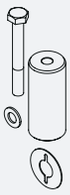

KIT - P9.004.010

陶瓷柱塞 22

KIT CERAMIC PISTON DIAMETER 22

KIT - P9.001.007

阀组件

COMPLETE VALVE

KIT - P9.003.020

密封组件

KIT COMPLETE SEALS

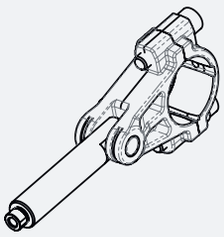

KIT - P9.041.005

预装配连接杆

PREASSEMBLED CONNECTING ROD

备件 GM Ø25 / SPARE PARTS GM Ø25

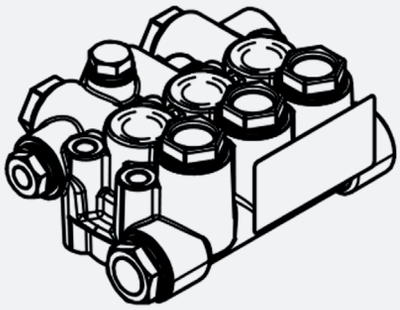

KIT - P9.040.011

泵头组件

COMPLETE HEAD OF THE PUMP

KIT - P9.039.002

油封

KIT OIL SEALS

KIT - P9.003.009

柱塞密封垫圈

KIT PLUNGER SEALS

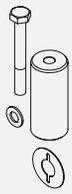

KIT - P9.004.011

陶瓷柱塞 25

KIT CERAMIC PISTON DIAMETER 25

KIT - P9.001.008

阀组件

COMPLETE VALVE

KIT - P9.003.021

密封组件

KIT COMPLETE SEALS

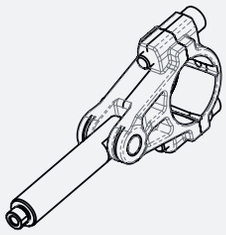

KIT - P9.041.005

预装配连接杆

PREASSEMBLED CONNECTING ROD

备件 GM Ø28 / SPARE PARTS GM Ø28

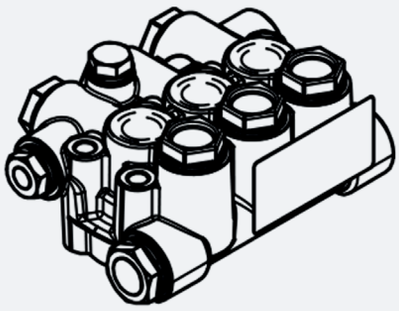

KIT - P9.040.012

泵头组件

COMPLETE HEAD OF THE PUMP

KIT - P9.039.002

油封

KIT OIL SEALS

KIT - P9.003.011

柱塞密封垫圈

KIT PLUNGER SEALS

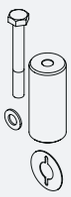

KIT - P9.004.012

陶瓷柱塞 28

KIT CERAMIC PISTON DIAMETER 28

KIT - P9.001.008

阀组件

COMPLETE VALVE

KIT - P9.003.022

密封组件

KIT COMPLETE SEALS

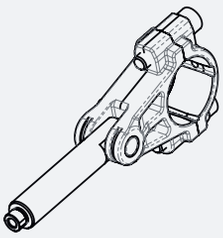

KIT - P9.041.005

预装配连接杆

PREASSEMBLED CONNECTING ROD

GM-CW

汽车清洗 / CAR WASH

最高进水温度 MAX INPUT WATER TEMPERATURE	最低输入压力 MINIMAL INPUT PRESSURE		进水 INLET	出水 OUTLET	镀镍歧管 NICKEL PLATED MANIFOLD
	< 50 lt	> 50 lt			
65°C 149° F	0.2 BAR	1 BAR	G 3/4"	G 1/2"	
	2.9 PSI	14.5 PSI			

GM-CW CAR WASH	流量 FLOW RATE		转速 ROUNDS	最高压力 PRESSURE		机油容量 OIL CAPACITY		净重 WEIGHT	
	L/min	Gpm	Rpm	Bar	Psi	Lt	Gal	Kg	Lbs
50HZ	18.00 » 63.00	4.75 » 16.64	1450	300	4351,13	1.2	0.31	19	41.88
60Hz	21.60 » 75.60	5.70 » 19.97	1740						

Mazzoni S.r.l. - Via Prati Vecchi 5 - 4025 Cavriago (RE) - Italy | www.e-mazzoni.it | info@e-mazzoni.it

GM-CW

汽车清洗 / CAR WASH

代码 Code	型号 Model	流量 / Flow Rate l/min - gpm 1450 rpm		1740 rpm		压力 / Pressure Bar	Psi	功率 / Power 50Hz HP	Kw	功率 / Power 60Hz HP	Kw	轴 Shaft	柱塞直径 Ø Plunger
P3.032.001-1	**GM18300R**	18.00	*4,76*	21.60	*5,71*	300.00	4351.13	14.03	10.45	16.83	12.54	45mm 右 / *Right*	20
P3.032.002-1	**GM22300R**	22.00	*5,81*	26.40	*6,97*	300.00	4351.13	17.14	12.77	20.57	15.33	45mm 右 / *Right*	20
P3.032.003-1	**GM25300R**	25.00	*6,60*	30.00	*7,93*	300.00	4351.13	19.48	14.51	23.38	17.42	45mm 右 / *Right*	20
P3.032.005-1	**GM27300R**	27.00	*7,13*	32.40	*8,56*	300.00	4351.13	21.04	15.67	25.25	18.81	55mm 右 / *Right*	20
P3.032.006-1	**GM30250R**	30.00	*7,93*	36.00	*9,51*	250.00	3625.94	19.48	14.51	23.38	17.42	45mm 右 / *Right*	22
P3.032.008-1	**GM33250R**	33.00	*8,72*	39.60	*10,46*	250.00	3625.94	21.43	15.96	25.71	19.16	55mm 右 / *Right*	22
P3.032.009-1	**GM35170R**	35.00	*9,25*	42.00	*11,10*	170.00	2465.64	15.45	11.51	18.55	13.82	45mm 右 / *Right*	25
P3.032.010-1	**GM40170R**	40.00	*10,57*	48.00	*12,68*	170.00	2465.64	17.66	13.16	21.19	15.79	45mm 右 / *Right*	25
P3.032.012-1	**GM43170R**	43.00	*11,36*	51.60	*13,63*	170.00	2465.64	18.99	14.15	22.78	16.97	55mm 右 / *Right*	25
P3.032.013-1	**GM50150R**	50.00	*13,21*	60.00	*15,85*	150.00	2175.57	19.48	14.51	23.38	17.42	45mm 右 / *Right*	28
P3.032.014-1	**GM54150R**	54.00	*14,27*	64.80	*17,12*	150.00	2175.57	21.04	15.67	25.25	18.81	55mm 右 / *Right*	28
P3.032.034-1	**GM63150R**	63.00	*16.64*	75.60	*19.97*	150.00	2175.57	24.54	18.30	29.45	21.96	55mm 右 / *Right*	28
P3.032.015-1	**GM18300L**	18.00	*4,76*	21.60	*5,71*	300.00	4351.13	14.03	10.45	16.83	12.54	45mm 左 / *Left*	20
P3.032.016-1	**GM22300L**	22.00	*5,81*	26.40	*6,97*	300.00	4351.13	17.14	12.77	20.57	15.33	45mm 左 / *Left*	20
P3.032.017-1	**GM25300L**	25.00	*6,60*	30.00	*7,93*	300.00	4351.13	19.48	14.51	23.38	17.42	45mm 左 / *Left*	20
P3.032.019-1	**GM27300L**	27.00	*7,13*	32.40	*8,56*	300.00	4351.13	21.04	15.67	25.25	18.81	55mm 左 / *Left*	20
P3.032.020-1	**GM30250L**	30.00	*7,93*	36.00	*9,51*	250.00	3625.94	19.48	14.51	23.38	17.42	45mm 左 / *Left*	22
P3.032.022-1	**GM33250L**	33.00	*8,72*	39.60	*10,46*	250.00	3625.94	21.43	15.96	25.71	19.16	55mm 左 / *Left*	22
P3.032.023-1	**GM35170L**	35.00	*9,25*	42.00	*11,10*	170.00	2465.64	15.45	11.51	18.55	13.82	45mm 左 / *Left*	25
P3.032.024-1	**GM40170L**	40.00	*10,57*	48.00	*12,68*	170.00	2465.64	17.66	13.16	21.19	15.79	45mm 左 / *Left*	25
P3.032.026-1	**GM43170L**	43.00	*11,36*	51.60	*13,63*	170.00	2465.64	18.99	14.15	22.78	16.97	55mm 左 / *Left*	25
P3.032.027-1	**GM50150L**	50.00	*13,21*	60.00	*15,85*	150.00	2175.57	19.48	14.51	23.38	17.42	45mm 左 / *Left*	28
P3.032.028-1	**GM54150L**	54.00	*14,27*	64.80	*17,12*	150.00	2175.57	21.04	15.67	25.25	18.81	55mm 左 / *Left*	28
P3.032.035-1	**GM63150L**	63.00	*16.64*	75.60	*19.97*	150.00	2175.57	24.54	18.30	29.45	21.96	55mm 左 / *Left*	28

GM-CW

汽车清洗 / CAR WASH

备件 GM Ø20 / SPARE PARTS GM Ø20

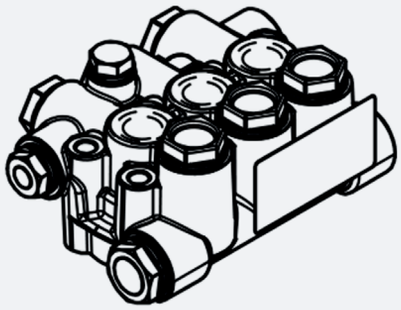

KIT - P9.040.024

泵头组件

COMPLETE HEAD OF THE PUMP

KIT - P9.039.002

油封

KIT OIL SEAL PUMP

KIT - P9.003.005

柱塞密封垫圈

KIT PLUNGER SEALS

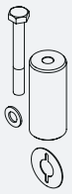

KIT - P9.004.009

陶瓷柱塞 20

KIT CERAMIC PISTON DIAMETER 20

KIT - P9.001.007

阀组件

COMPLETE VALVE

KIT - P9.003.019

密封组件

KIT COMPLETE SEALS

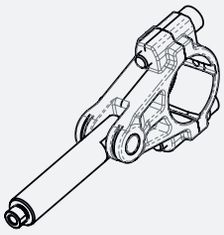

KIT - P9.041.005

预装配连接杆

PREASSEMBLED CONNECTING ROD

备件 GM Ø22 / SPARE PARTS GM Ø22

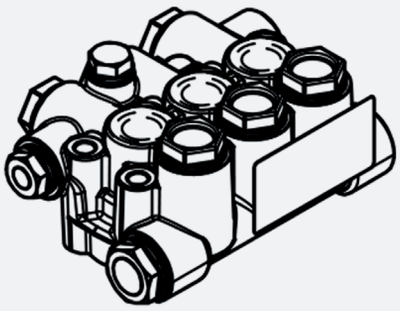

KIT - P9.040.025

泵头组件

COMPLETE HEAD OF THE PUMP

KIT - P9.039.002

油封

KIT OIL SEAL PUMP

KIT - P9.003.007

柱塞密封垫圈

KIT PLUNGER SEALS

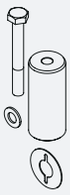

KIT - P9.004.010

陶瓷柱塞 22

KIT CERAMIC PISTON DIAMETER 22

KIT - P9.001.007

阀组件

COMPLETE VALVE

KIT - P9.003.020

密封组件

KIT COMPLETE SEALS

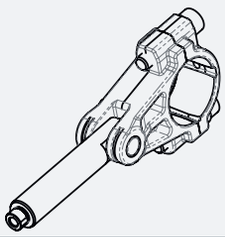

KIT - P9.041.005

预装配连接杆

PREASSEMBLED CONNECTING ROD

备件 GM Ø25 / SPARE PARTS GM Ø25

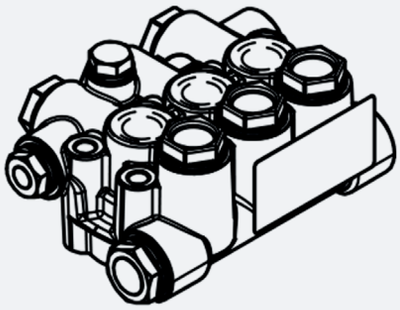

KIT - P9.040.026

泵头组件

COMPLETE HEAD OF THE PUMP

KIT - P9.039.002

油封

KIT OIL SEAL PUMP

KIT - P9.003.009

柱塞密封垫圈

KIT PLUNGER SEALS

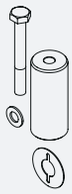

KIT - P9.004.011

陶瓷柱塞 25

KIT CERAMIC PISTON DIAMETER 25

KIT - P9.001.008

阀组件

COMPLETE VALVE

KIT - P9.003.021

密封组件

KIT COMPLETE SEALS

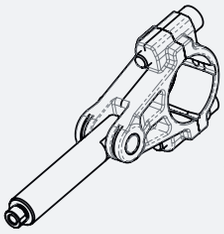

KIT - P9.041.005

预装配连接杆

PREASSEMBLED CONNECTING ROD

备件 GM Ø28 / SPARE PARTS GM Ø28

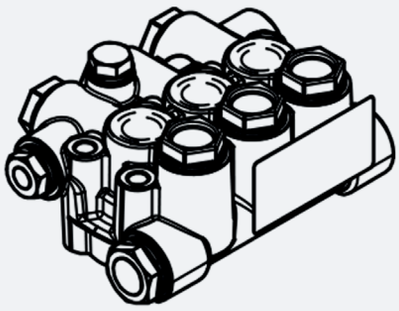

KIT - P9.040.027

泵头组件

COMPLETE HEAD OF THE PUMP

KIT - P9.039.002

油封

KIT OIL SEAL PUMP

KIT - P9.003.011

柱塞密封垫圈

KIT PLUNGER SEALS

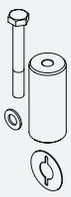

KIT - P9.004.012

陶瓷柱塞 28

KIT CERAMIC PISTON DIAMETER 28

KIT - P9.001.008

阀组件

COMPLETE VALVE

KIT - P9.003.022

密封组件

KIT COMPLETE SEALS

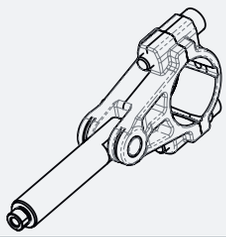

KIT - P9.041.005

预装配连接杆

PREASSEMBLED CONNECTING ROD

TGM

高温 / HIGH TEMPERATURE

最高进水温度 MAX INPUT WATER TEMPERATURE	最低输入压力 MINIMAL INPUT PRESSURE	进水 INLET	出水 OUTLET	镀镍歧管 NICKEL PLATED MANIFOLD
85°C 185° F	3 BAR 43.51 PSI	G 3/4"	G 1/2"	

TGM HIGH TEMPERATURE	流量 FLOW RATE		转速 ROUNDS	最高压力 PRESSURE		机油容量 OIL CAPACITY		净重 WEIGHT	
	L/min	Gpm	Rpm	Bar	Psi	Lt	Gal	Kg	Lbs
50HZ	18.00 » 63.00	4.75 » 16.64	1450	200	2900	1.2	0.31	19	41.88
60Hz	21.60 » 75.60	5.70 » 19.97	1740						

Mazzoni S.r.l. - Via Prati Vecchi 5 - 4025 Cavriago (RE) - Italy | www.e-mazzoni.it | info@e-mazzoni.it

TGM

高温 / HIGH TEMPERATURE

代码 Code	型号 Model	流量 / Flow Rate l/min - gpm 1450 rpm		1740 rpm		压力 / Pressure Bar	Psi	功率 / Power 50Hz HP	Kw	功率 / Power 60Hz HP	Kw	轴 Shaft	柱塞直径 Ø Plunger
P3.034.001-1	**TGM18200R**	18.00	*4,76*	21.60	*5,71*	200.00	2900	9.35	6.98	11.2	8.37	45mm 右 / *Right*	20
P3.034.002-1	**TGM22200R**	22.00	*5,81*	26.40	*6,97*	200.00	2900	11.43	8.53	13.71	10.23	45mm 右 / *Right*	20
P3.034.003-1	**TGM25200R**	25.00	*6,60*	30.00	*7,93*	200.00	2900	12.99	9.69	15.58	11.63	45mm 右 / *Right*	20
P3.034.005-1	**TGM27200R**	27.00	*7,13*	32.40	*8,56*	200.00	2900	14.03	10.38	16.83	12.56	55mm 右 / *Right*	20
P3.034.006-1	**TGM30200R**	30.00	*7,93*	36.00	*9,51*	200.00	2900	15.58	11.63	18.70	13.96	45mm 右 / *Right*	22
P3.034.008-1	**TGM33200R**	33.00	*8,72*	39.60	*10,46*	200.00	2900	17.14	12.79	20.57	15.35	55mm 右 / *Right*	22
P3.034.009-1	**TGM35170R**	35.00	*9,25*	42.00	*11,10*	170.00	2465	15.45	11.44	18.55	13.84	45mm 右 / *Right*	25
P3.034.010-1	**TGM40170R**	40.00	*10,57*	48.00	*12,68*	170.00	2465	17.66	13.18	21.19	15.82	45mm 右 / *Right*	25
P3.034.012-1	**TGM43170R**	43.00	*11,36*	51.60	*13,63*	170.00	2465	18.99	14.17	22.78	17.00	55mm 右 / *Right*	25
P3.034.013-1	**TGM50150R**	50.00	*13,21*	60.00	*15,85*	150.00	2175.57	19.48	14.53	23.38	17.45	45mm 右 / *Right*	28
P3.034.014-1	**TGM54150R**	54.00	*14,27*	64.80	*17,12*	150.00	2175.57	21.04	15.70	25.25	18.84	55mm 右 / *Right*	28
P3.034.034-1	**TGM63150R**	63.00	*16.64*	75.60	*19.97*	150.00	2175.57	24.55	18.32	29.45	21.82	55mm 右 / *Right*	28
P3.034.015-1	**TGM18200 L**	18.00	*4,76*	21.60	*5,71*	200.00	2900	9.35	6.98	11.22	8.37	45mm 左 / *Left*	20
P3.034.016-1	**TGM22200 L**	22.00	*5,81*	26.40	*6,97*	200.00	2900	11.43	8.53	13.71	10.23	45mm 左 / *Left*	20
P3.034.017-1	**TGM25200 L**	25.00	*6,61*	30.00	*7,93*	200.00	2900	12.99	9.69	15.58	11.63	45mm 左 / *Left*	20
P3.034.019-1	**TGM27200 L**	27.00	*7,13*	32.40	*8,56*	200.00	2900	14.03	10.38	16.83	12.56	55mm 左 / *Left*	20
P3.034.020-1	**TGM30200 L**	30.00	*7,93*	36.00	*9,51*	200.00	2900	15.58	11.63	18.70	13.96	45mm 左 / *Left*	22
P3.034.022-1	**TGM33200 L**	33.00	*8,72*	39.60	*10,46*	200.00	2900	17.14	12.79	20.57	15.35	55mm 左 / *Left*	22
P3.034.023-1	**TGM35170 L**	35.00	*9,25*	42.00	*11,10*	170.00	2465	15.45	11.44	18.55	13.84	45mm 左 / *Left*	25
P3.034.024-1	**TGM40170 L**	40.00	*10,57*	48.00	*12,68*	170.00	2465	17.66	13.18	21.19	15.82	45mm 左 / *Left*	25
P3.034.026-1	**TGM43170 L**	43.00	*11,36*	51.60	*13,63*	170.00	2465	18.99	14.17	22.78	17.00	55mm 左 / *Left*	25
P3.034.027-1	**TGM50150 L**	50.00	*13,21*	60.00	*15,85*	150.00	2175.57	19.48	14.54	23.38	17.45	45mm 左 / *Left*	28
P3.034.028-1	**TGM54150 L**	54.00	*14,27*	64.80	*17,12*	150.00	2175.57	21.04	15.70	25.25	18.84	55mm 左 / *Left*	28
P3.034.035-1	**TGM63150L**	63.00	*16.64*	75.60	*19.97*	150.00	2175.57	24.55	18.32	29.45	21.98	55mm 左 / *Left*	28

TGM

高温 / HIGH TEMPERATURE

备件 TGM Ø20 / *SPARE PARTS TGM Ø20*

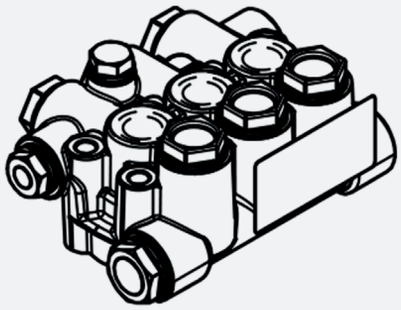

KIT - P9.040.020

泵头组件

COMPLETE HEAD OF THE PUMP

KIT - P9.039.002

油封

KIT OIL SEAL PUMP

KIT - P9.003.032

柱塞密封垫圈

KIT PLUNGER SEALS

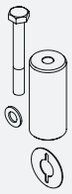

KIT - P9.004.009

陶瓷柱塞 20

KIT CERAMIC PISTON DIAMETER 20

KIT - P9.001.007

阀组件

COMPLETE VALVE

KIT - P9.003.029

密封组件

KIT COMPLETE SEALS

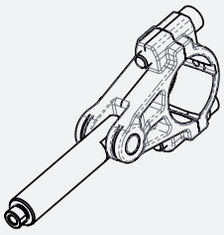

KIT - P9.041.005

预装配连接杆

PREASSEMBLED CONNECTING ROD

备件 TGM Ø22 / *SPARE PARTS TGM Ø22*

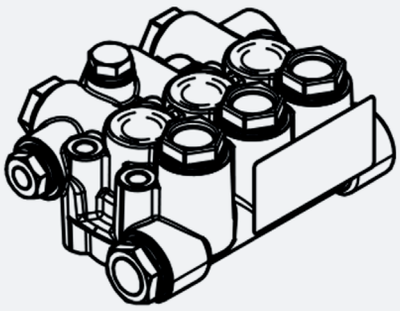

KIT - P9.040.021

泵头组件

COMPLETE HEAD OF THE PUMP

KIT - P9.039.002

油封

KIT OIL SEAL PUMP

KIT - P9.003.033

柱塞密封垫圈

KIT PLUNGER SEALS

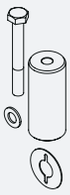

KIT - P9.004.010

陶瓷柱塞 22

KIT CERAMIC PISTON DIAMETER 22

KIT - P9.001.007

阀组件

COMPLETE VALVE

KIT - P9.003.024

密封组件

KIT COMPLETE SEALS

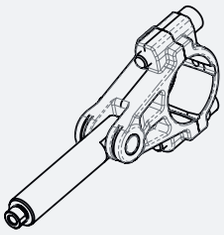

KIT - P9.041.005

预装配连接杆

PREASSEMBLED CONNECTING ROD

备件 TGM Ø25 / *SPARE PARTS TGM Ø25*

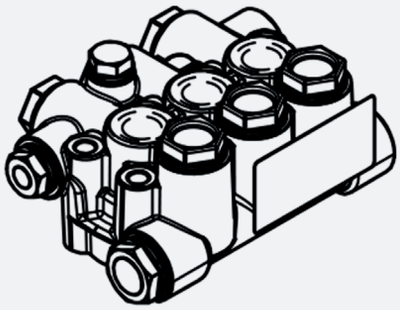

KIT - P9.040.026

泵头组件

COMPLETE HEAD OF THE PUMP

KIT - P9.039.002

油封

KIT OIL SEAL PUMP

KIT - P9.003.009

柱塞密封垫圈

KIT PLUNGER SEALS

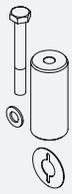

KIT - P9.004.011

陶瓷柱塞 25

KIT CERAMIC PISTON DIAMETER 25

KIT - P9.001.008

阀组件

COMPLETE VALVE

KIT - P9.003.021

密封组件

KIT COMPLETE SEALS

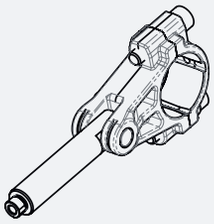

KIT - P9.041.005

预装配连接杆

PREASSEMBLED CONNECTING ROD

备件 TGM Ø28 / *SPARE PARTS TGM Ø28*

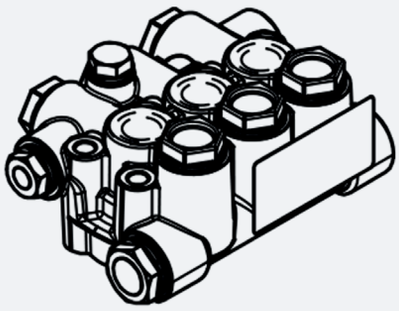

KIT - P9.040.023

泵头组件

COMPLETE HEAD OF THE PUMP

KIT - P9.039.002

油封

KIT OIL SEAL PUMP

KIT - P9.003.035

柱塞密封垫圈

KIT PLUNGER SEALS

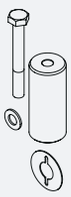

KIT - P9.004.012

陶瓷柱塞 28

KIT CERAMIC PISTON DIAMETER 28

KIT - P9.001.008

阀组件

COMPLETE VALVE

KIT - P9.003.031

密封组件

KIT COMPLETE SEALS

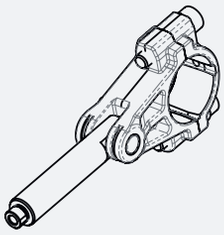

KIT - P9.041.005

预装配连接杆

PREASSEMBLED CONNECTING ROD

GMX

最高进水温度 MAX INPUT WATER TEMPERATURE	最低输入压力 MINIMAL INPUT PRESSURE	进水 INLET	出水 OUTLET	不锈钢歧管 STAINLESS STEEL HEAD
85°C 185° F	3 BAR 43.51 PSI	G 3/4"	G 1/2"	

GMX	流量 FLOW RATE		转速 ROUNDS	最高压力 MAX PRESSURE		机油容量 OIL CAPACITY		净重 WEIGHT	
	L/min	Gpm	Rpm	Bar	Psi	Lt	Gal	Kg	Lbs
50HZ	18.00 » 63.00	4.75 » 16.64	1450	200	2900	1.2	0.31	19	41.88
60Hz	21.60 » 75.60	5.70 » 19.97	1740						

Mazzoni S.r.l. - Via Prati Vecchi 5 - 4025 Cavriago (RE) - Italy | www.e-mazzoni.it | info@e-mazzoni.it

GMX

代码 Code	型号 Model	流量 / Flow Rate l/min - gpm 1450 rpm		1740 rpm		压力 / Pressure Bar	Psi	功率 / Power 50Hz HP	Kw	功率 / Power 60Hz HP	Kw	轴 Shaft	柱塞直径 Ø Plunger
P3.033.001-1	**GMX18200R**	18.00	*4,76*	21.60	*5,71*	200.00	2900	9.35	6.98	11.2	8.37	45mm 右 / *Right*	20
P3.033.002-1	**GMX22200R**	22.00	*5,81*	26.40	*6,97*	200.00	2900	11.43	8.53	13.71	10.23	45mm 右 / *Right*	20
P3.033.003-1	**GMX25200R**	25.00	*6,60*	30.00	*7,93*	200.00	2900	12.99	9.69	15.58	11.63	45mm 右 / *Right*	20
P3.033.005-1	**GMX27200R**	27.00	*7,13*	32.40	*8,56*	200.00	2900	14.03	10.47	16.83	12.56	55mm 右 / *Right*	20
P3.033.006-1	**GMX30200R**	30.00	*7,93*	36.00	*9,51*	200.00	2900	15.58	11.63	18.70	13.96	45mm 右 / *Right*	22
P3.033.008-1	**GMX33200R**	33.00	*8,72*	39.60	*10,46*	200.00	2900	17.14	12.79	20.57	15.35	45mm 右 / *Right*	22
P3.033.009-1	**GMX35170R**	35.00	*9,25*	42.00	*11,10*	170.00	2465.64	15.45	11.51	18.55	13.82	45mm 右 / *Right*	25
P3.033.010-1	**GMX40170R**	40.00	*10,57*	48.00	*12,68*	170.00	2465.64	17.66	13.16	21.19	15.79	45mm 右 / *Right*	25
P3.033.012-1	**GMX43170R**	43.00	*11,36*	51.60	*13,63*	170.00	2465.64	18.99	14.15	22.78	16.97	55mm 右 / *Right*	25
P3.033.013-1	**GMX50150R**	50.00	*13,21*	60.00	*15,85*	150.00	2175.57	19.48	14.51	23.38	17.42	45mm 右 / *Right*	28
P3.033.014-1	**GMX54150R**	54.00	*14,27*	64.80	*17,12*	150.00	2175.57	21.04	15.67	25.25	18.81	55mm 右 / *Right*	28
P3.033.034-1	**GMX63150R**	63.00	*16.64*	75.60	*19.97*	150.00	2175.57	24.54	18.30	29.45	21.96	55mm 右 / *Right*	28
P3.033.015-1	**GMX18200L**	18.00	*4,76*	21.60	*5,71*	200.00	2900	9.35	6.98	11.22	8.37	45mm 左 / *Left*	20
P3.033.016-1	**GMX22200L**	22.00	*5,81*	26.40	*6,97*	200.00	2900	11.43	8.53	13.71	10.23	45mm 左 / *Left*	20
P3.033.017-1	**GMX25200L**	25.00	*6,60*	30.00	*7,93*	200.00	2900	12.99	9.69	15.58	11.63	45mm 左 / *Left*	20
P3.033.019-1	**GMX27200L**	27.00	*7,13*	32.40	*8,56*	200.00	2900	14.03	10.47	16.83	12.56	55mm 左 / *Left*	20
P3.033.020-1	**GMX30200L**	30.00	*7,93*	36.00	*9,51*	200.00	2900	15.58	11.63	18.70	13.96	45mm 左 / *Left*	22
P3.033.022-1	**GMX33200L**	33.00	*8,72*	39.60	*10,46*	200.00	2900	17.14	12.79	20.57	15.35	55mm 左 / *Left*	22
P3.033.023-1	**GMX35170L**	35.00	*9,25*	42.00	*11,10*	170.00	2465.64	15.45	11.51	18.55	13.82	45mm 左 / *Left*	25
P3.033.024 -1	**GMX40170L**	40.00	*10,57*	48.00	*12,68*	170.00	2465.64	17.66	13.16	21.19	15.79	45mm 左 / *Left*	25
P3.033.026-1	**GMX43170L**	43.00	*11,36*	51.60	*13,63*	170.00	2465.64	18.99	14.15	22.78	16.97	55mm 左 / *Left*	25
P3.033.027-1	**GMX50150L**	50.00	*13,21*	60.00	*15,85*	150.00	2175.57	19.48	14.51	23.38	17.42	45mm 左 / *Left*	28
P3.033.028-1	**GMX54150L**	54.00	*14,27*	64.80	*17,12*	150.00	2175.57	21.04	15.67	25.25	18.81	55mm 左 / *Left*	28
P3.033.035-1	**GMX63150L**	63.00	*16.64*	75.60	*19.97*	150.00	2175.57	24.54	18.30	29.45	21.96	55mm 左 / *Left*	28

GMX

备件 GMX D.20 / *SPARE PARTS GMX D.20*

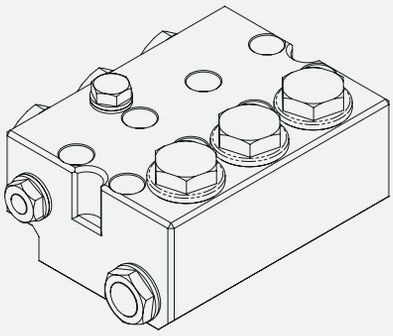

KIT - P9.040.028

泵头组件

COMPLETE HEAD OF THE PUMP

KIT - P9.039.002

油封

KIT OIL SEAL PUMP

KIT - P9.003.032

柱塞密封垫圈

KIT PLUNGER SEALS

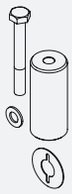

KIT - P9.004.016

陶瓷柱塞 20

KIT CERAMIC PISTON DIAMETER 20

KIT - P9.001.009

阀组件

COMPLETE VALVE

KIT - P9.003.040

密封组件

KIT COMPLETE SEALS

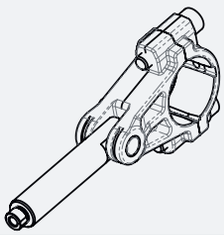

KIT - P9.041.005

预装配连接杆

PREASSEMBLED CONNECTING ROD

备件 GMX D22 / *SPARE PARTS GMX D22*

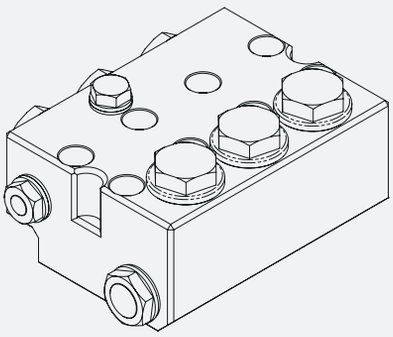

KIT - P9.040.029

泵头组件

COMPLETE HEAD OF THE PUMP

KIT - P9.039.002

油封

KIT OIL SEAL PUMP

KIT - P9.003.033

柱塞密封垫圈

KIT PLUNGER SEALS

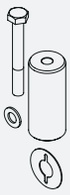

KIT - P9.004.017

陶瓷柱塞 22

KIT CERAMIC PISTON DIAMETER 22

KIT - P9.001.009

阀组件

COMPLETE VALVE

KIT - P9.003.041

密封组件

KIT COMPLETE SEALS

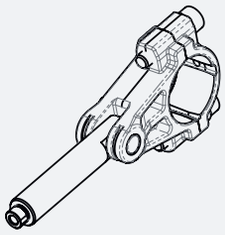

KIT - P9.041.005

预装配连接杆

PREASSEMBLED CONNECTING ROD

备件 GMX D25 / *SPARE PARTS GMX D25*

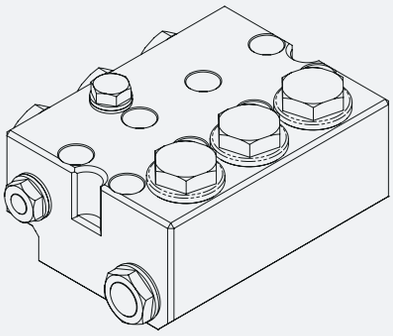

KIT - P9.040.030

泵头组件

COMPLETE HEAD OF THE PUMP

KIT - P9.039.002

油封

KIT OIL SEAL PUMP

KIT - P9.003.034

柱塞密封垫圈

KIT PLUNGER SEALS

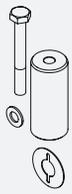

KIT - P9.004.018

陶瓷柱塞 25

KIT CERAMIC PISTON DIAMETER 25

KIT - P9.001.010

阀组件

COMPLETE VALVE

KIT - P9.003.042

密封组件

KIT COMPLETE SEALS

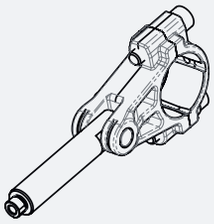

KIT - P9.041.005

预装配连接杆

PREASSEMBLED CONNECTING ROD

备件 GMX D28 / *SPARE PARTS GMX D28*

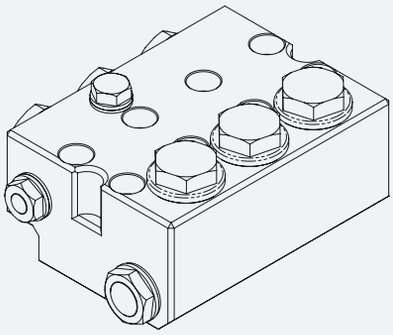

KIT - P9.040.031

泵头组件

COMPLETE HEAD OF THE PUMP

KIT - P9.039.002

油封

KIT OIL SEAL PUMP

KIT - P9.003.035

柱塞密封垫圈

KIT PLUNGER SEALS

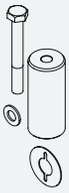

KIT - P9.004.019

陶瓷柱塞 28

KIT CERAMIC PISTON DIAMETER 28

KIT - P9.001.010

阀组件

COMPLETE VALVE

KIT - P9.003.043

密封组件

KIT COMPLETE SEALS

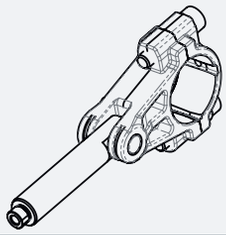

KIT - P9.041.005

预装配连接杆

PREASSEMBLED CONNECTING ROD

GM

	转速 RPM	流量 FLOW RATE	最高压力 MAX PRESSURE		最高进水温度 MAX INPUT WATER TEMPERATURE
50 Hz	1450	18.00 - 63.00 l/min	300 Bar	4351 Psi	65°C 149° F
		4.78 - 16.64 gpm			
60Hz	1740	21.60 -75.60 l/min			
		5.71 - 19.97 gpm			

GM-CW

镀镍歧管 / *Nickel-plated manifold*

	转速 RPM	流量 FLOW RATE	最高压力 MAX PRESSURE		最高进水温度 MAX INPUT WATER TEMPERATURE
50 Hz	1450	18.00 - 63.00 l/min	300 Bar	4351 Psi	65°C 149° F
		4.78 - 16.64 gpm			
60Hz	1740	21.60 -75.60 l/min			
		5.71 - 19.97 gpm			

TGM

镀镍歧管 / *Nickel-plated manifold*

	转速 RPM	流量 FLOW RATE	最高压力 MAX PRESSURE		最高进水温度 MAX INPUT WATER TEMPERATURE
50 Hz	1450	18.00 - 63.00 l/min	200 Bar	2900 Psi	**85°C** **185° F**
		4.78 - 16.64 gpm			
60Hz	1740	21.60 -75.60 l/min			
		5.71 - 19.97 gpm			

GMX

不锈钢歧管 / *Stainless steel head*

	转速 RPM	流量 FLOW RATE	最高压力 MAX PRESSURE		最高进水温度 MAX INPUT WATER TEMPERATURE
50 Hz	1450	18.00 - 63.00 l/min	200 Bar	2900 Psi	**85°C** **185° F**
		4.78 - 16.64 gpm			
60Hz	1740	21.60 -75.60 l/min			
		5.71 - 19.97 gpm			

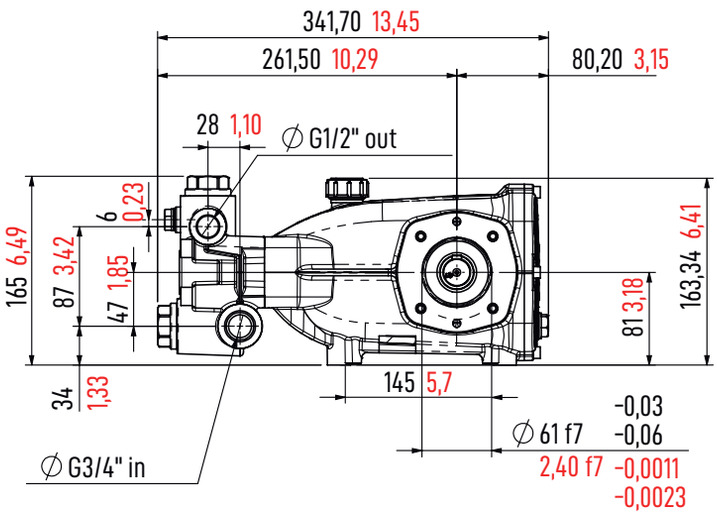

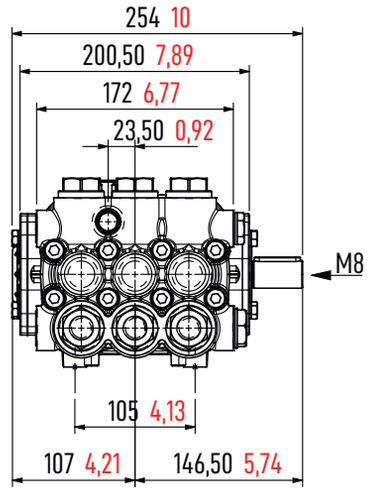

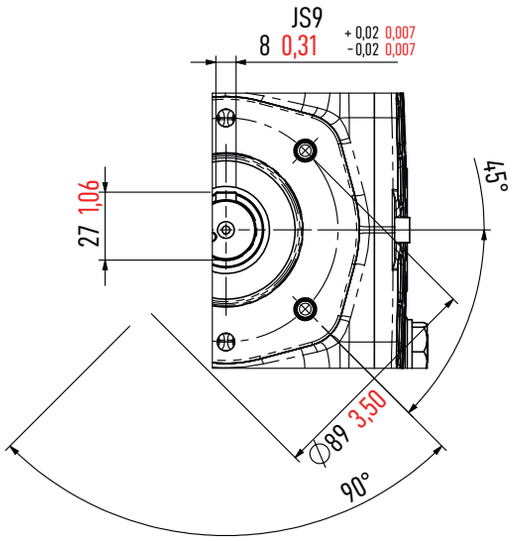

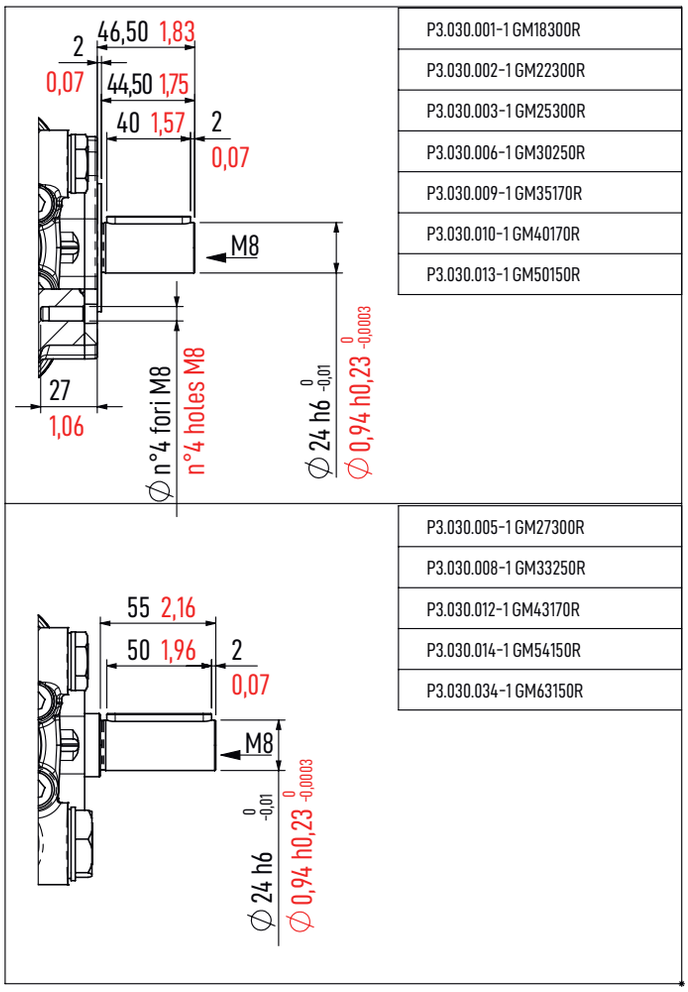

P3.030.001-1 GM18300R
P3.030.002-1 GM22300R
P3.030.003-1 GM25300R
P3.030.006-1 GM30250R
P3.030.009-1 GM35170R
P3.030.010-1 GM40170R
P3.030.013-1 GM50150R

P3.030.005-1 GM27300R
P3.030.008-1 GM33250R
P3.030.012-1 GM43170R
P3.030.014-1 GM54150R
P3.030.034-1 GM63150R

单位 / *UNITS OF MEASUREMENT*

● mm ● inch

XM SERIE

XM

XM

最高进水温度 MAX INPUT WATER TEMPERATURE	最低输入压力 MINIMAL INPUT PRESSURE	进水 INLET	出水 OUTLET
65°C *149° F*	0.2 BAR 2.9 PSI	G 1/2"	G 3/8"

XM	流量 FLOW RATE		转速 ROUNDS	最高压力 MAX PRESSURE		机油容量 OIL CAPACITY		净重 WEIGHT	
	L/min	Gpm	Rpm	Bar	Psi	Lt	Gal	Kg	Lbs
50HZ	11.00 » 21.00	2.90 » 5.54	1450	500	7251.89	1.2	0.31	23	50.7
60Hz	13.20 » 25.20	3.48 » 6.65	1740						

Mazzoni S.r.l. - Via Prati Vecchi 5 - 4025 Cavriago (RE) - Italy | www.e-mazzoni.it | info@e-mazzoni.it

XM

代码 Code	型号 Model	流量 / Flow Rate l/min - gpm 1450 rpm		1740 rpm		压力 / Pressure Bar	Psi	功率 / Power 50Hz HP	Kw	60Hz HP	Kw	轴 Shaft Ø 24	mm
P3.031.005-1	**XM11500R**	11	*2,91*	13,2	*3,49*	500.00	7251.89	14.29	10.58	17.14	12.70	右 / *Right*	45
P3.031.006-1	**XM15500R**	15	*3,96*	18	*4,76*	500.00	7251.89	19.48	14.43	23.38	17.32	右 / *Right*	45
P3.031.007-1	**XM17500R**	17	*4,49*	20,4	*5,39*	500.00	7251.89	22.08	16.35	26.49	19.62	右 / *Right*	55
P3.031.008-1	**XM21500R**	21	*5,55*	25,2	*6,66*	500.00	7251.89	27.27	20.20	32.73	24.24	右 / *Right*	55
P3.031.013-1	**XM11500L**	11	*2,91*	13,2	*3,49*	500.00	7251.89	14.29	10.58	17.14	12.70	左/*Left*	45
P3.031.014-1	**XM15500L**	15	*3,96*	18	*4,76*	500.00	7251.89	19.48	14.43	23.38	17.32	左/*Left*	45
P3.031.015-1	**XM17500L**	17	*4,49*	20,4	*5,39*	500.00	7251.89	22.08	16.35	26.49	19.62	左/*Left*	55
P3.031.016-1	**XM21500L**	21	*5,55*	25,2	*6,66*	500.00	7251.89	27.27	20.20	32.73	24.24	左/*Left*	55

备件 / *SPARE PARTS*

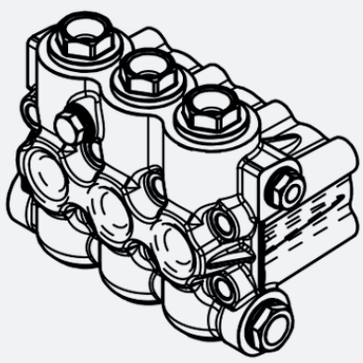

KIT - P9.040.007

泵头组件

COMPLETE HEAD OF THE PUMP

KIT - P9.039.002

油封

KIT OIL SEAL PUMP XM

KIT - P9.003.046

柱塞密封垫圈

KIT PLUNGER SEALS

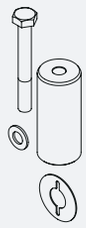

KIT - P9.004.014

陶瓷柱塞 16

KIT CERAMIC PISTON DIAMETER 16

KIT - P9.001.004

阀组件

COMPLETE VALVE

KIT - P9.003.047

密封组件

KIT COMPLETE SEALS

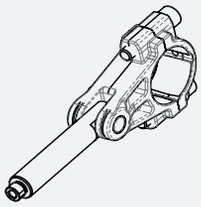

KIT - P9.041.005

预装配连接杆

PREASSEMBLED CONNECTING ROD

XM

	转速 RPM	流量 FLOW RATE	最高压力 MAX PRESSURE	最高进水温度 MAX INPUT WATER TEMPERATURE
50 Hz	1450	11.00 - 21.0 l/min	500 Bar 7251 Psi	65°C 149° F
		2.90 - 3.57 gpm		
60Hz	1740	13.20 - 25.20 l/min		
		3.48 -6.65 gpm		

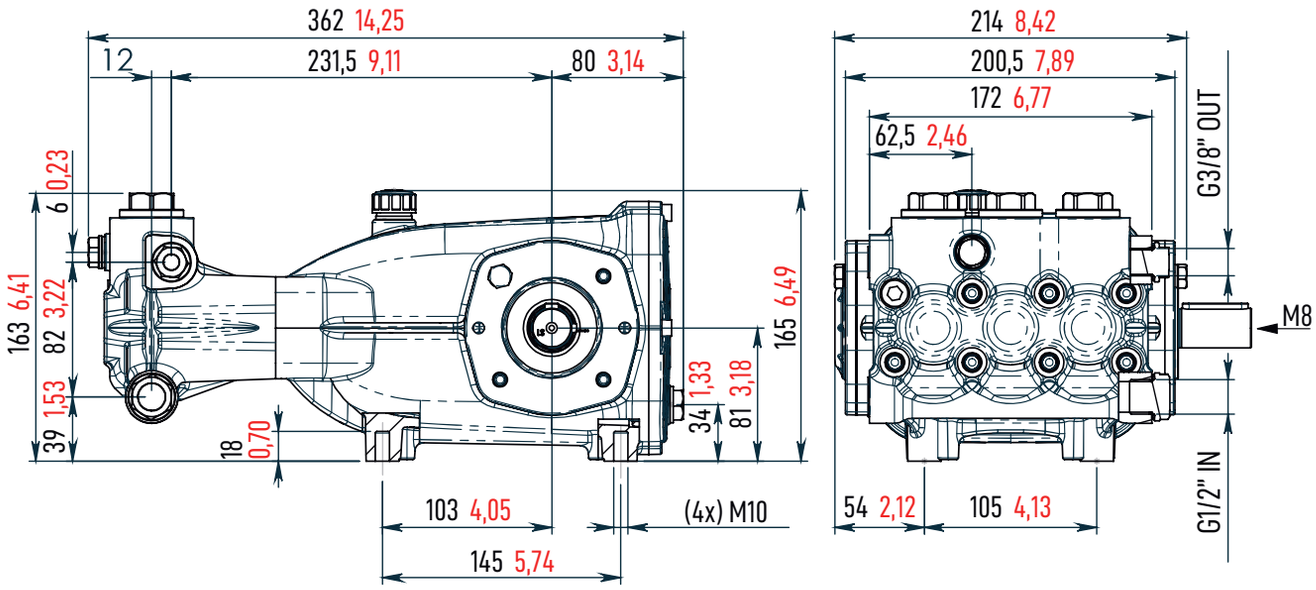

DETAILED FLANGE VIEW
法兰详图

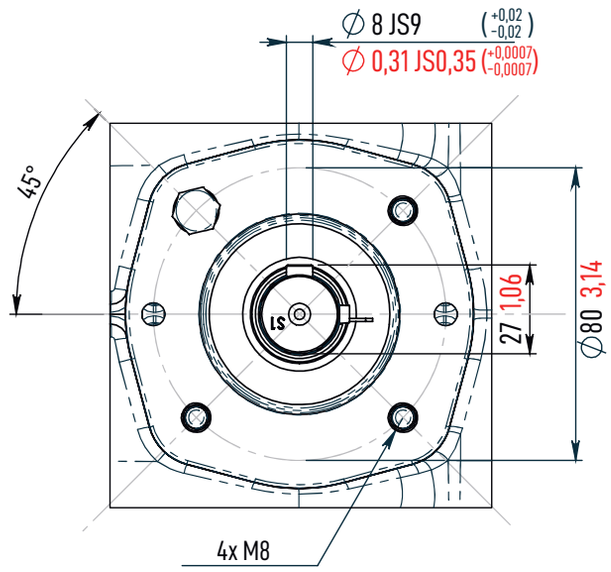

XM11/500
XM15/500

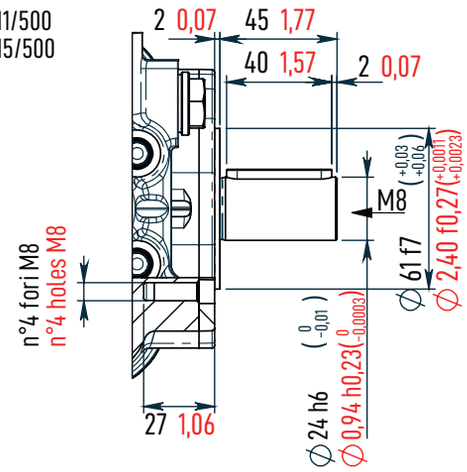

XM17/500
XM21/500

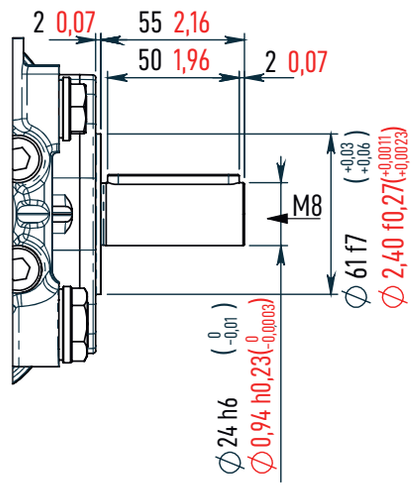

单位 / *UNITS OF MEASUREMENT*

● mm ● inch

LM SERIES

LM

LMX

LM

最高进水温度 MAX INPUT WATER TEMPERATURE	最低输入压力 MINIMAL INPUT PRESSURE	进水 INLET	出水 OUTLET
65°C 149° F	0.2 BAR 2.9 PSI	Ø20 G 3/4" Ø30 G 1" Ø40 G 1-1/4"	Ø20 G 1-1/4"" Ø30 G 3/4" Ø40 G 3/4"

LM	流量 FLOW RATE		转速 ROUNDS	最高压力 MAX PRESSURE		机油容量 OIL CAPACITY		净重 WEIGHT	
	L/min	Gpm	Rpm	Bar	Psi	Lt	Gal	Kg	Lbs
50HZ	45.00 » 120.00	11.88 » 31.68	1000	280	4060	3.1	0.82	70	154
	40.00 » 80.00	10.56 » 21.12	1450						

Mazzoni S.r.l. - Via Prati Vecchi 5 - 4025 Cavriago (RE) - Italy | www.e-mazzoni.it | info@e-mazzoni.it

LM

代码 Code	型号 Model	流量 / Flow Rate l/min - gpm 1000 rpm		1450 rpm		压力 / Pressure Bar	Psi	功率 / Power 50Hz HP	50Hz Kw	60Hz HP	60Hz Kw	轴 /Shaft Ø: 40	mm	柱塞直径 Plunger mm
P3.040.006	**LM40280R**			40	*10,56*	280	4060			29,09	21,55	右 / *Right*	80	30
P3.040.007	**LM67280R**			67	*17,68*	280	4060			43,64	32,32	右 / *Right*	80	30
P3.040.008	**LM80280R**			80	*21,12*	280	4060			58,18	43,1	右 / *Right*	80	30
P3.040.004	**LM45280R**	45	*11,88*			280	4060	32,73	24,24			右 / *Right*	80	30
P3.040.005	**LM60280R**	60	*15,84*			280	4060	43,64	32,32			右 / *Right*	80	30
P3.040.009	**LM80150R**	80	*21,12*			150	2175	31,17	23,09			右 / *Right*	80	40
P3.040.010	**LM100150R**	100	*26,4*			150	2175	38,96	28,86			右 / *Right*	80	40
P3.040.011	**LM120150R**	120	*31,68*			150	2175	46,75	34,63			右 / *Right*	80	40
P3.040.017	**LM40280L**			40	*10,56*	280	4060			29,09	21,55	左/*Left*	80	30
P3.040.018	**LM67280L**			67	*17,68*	280	4060			43,64	32,32	左/*Left*	80	30
P3.040.019	**LM80280L**			80	*21,12*	280	4060			58,18	43,1	左/*Left*	80	30
P3.040.015	**LM45280L**	45	*11,88*			280	4060	32,73	24,24			左/*Left*	80	30
P3.040.016	**LM60280L**	60	*15,84*			280	4060	43,64	32,32			左/*Left*	80	30
P3.040.020	**LM80150L**	80	*21,12*			150	2175	31,17	23,09			左/*Left*	80	40
P3.040.021	**LM100150L**	100	*26,4*			150	2175	38,96	28,86			左/*Left*	80	40
P3.040.022	**LM120150L**	120	*31,68*			150	2175	46,75	34,63			左/*Left*	80	40
								1000 Rpm		**1450 Rpm**				

备件 / *SPARE PARTS*

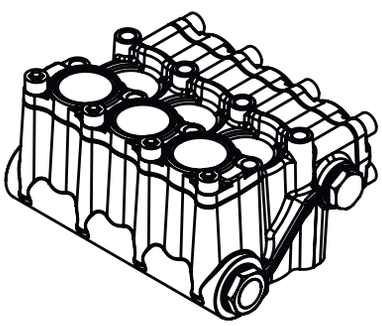

Ø30 - KIT - P9.040.038

Ø40 - KIT - P9.040.039

泵头组件

COMPLETE HEAD OF THE PUMP

KIT - P9.039.003

油封

KIT OIL SEAL PUMP XM

Ø30 - KIT - P9.003.058

Ø40 - KIT - P9.003.059

柱塞密封垫圈

KIT PLUNGER SEALS

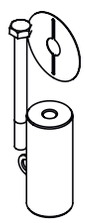

Ø30 - KIT - P9.004.025

Ø40 - KIT - P9.004.026

陶瓷柱塞

KIT CERAMIC PISTON

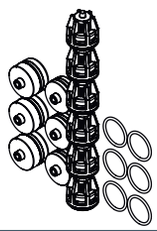

Ø30 - KIT - P9.001.013

Ø40 - KIT - P9.001.014

阀组件

COMPLETE VALVE

Ø30 - KIT - P9.003.061

Ø40 - KIT - P9.003.060

密封组件

KIT COMPLETE SEALS

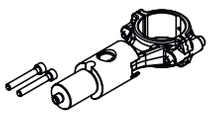

KIT - P9.041.009

预装配连接杆

PREASSEMBLED CONNECTING ROD

LMX

最高进水温度 MAX INPUT WATER TEMPERATURE	最低输入压力 MINIMAL INPUT PRESSURE	进水 INLET	出水 OUTLET
65°C 149° F	0.2 BAR 2.9 PSI	Ø20 G 3/4" Ø30 G 1" Ø40 G 1-1/4"	Ø20 G 1-1/4"" Ø30 G 3/4" Ø40 G 3/4"

不锈钢 AISI
Stainless Steel AISI 430

LMX	流量 FLOW RATE		转速 ROUNDS	最高压力 MAX PRESSURE		机油容量 OIL CAPACITY		净重 WEIGHT	
	L/min	Gpm	Rpm	Bar	Psi	Lt	Gal	Kg	Lbs
50HZ	20.00 » 30.00	5.28 » 7.92	1000	500	7251.89	3.1	0.82	60	132.27
	29.00 » 41.00	7.66 » 10.82	1450						

Mazzoni S.r.l. - Via Prati Vecchi 5 - 4025 Cavriago (RE) - Italy | www.e-mazzoni.it | info@e-mazzoni.it

LMX

代码 Code	型号 Model	流量 / Flow Rate l/min - gpm 1000 rpm		1450 rpm		压力 / Pressure Bar	Psi	功率 / Power 50Hz HP	50Hz Kw	60Hz HP	60Hz Kw	轴 /Shaft Ø: 40	mm	柱塞直径 Plunger mm
P3.040.003	**LM29500R**	20	*5,28*	29	*7,66*	500	7252	25,97	19,24	37,66	27,9	右 / *Right*	80	20
P3.040.001	**LM36500R**	25	*6,6*	36	*9,5*	500	7252	32,47	24,05	46,75	34,63	右 / *Right*	80	20
P3.040.002	**LM41500R**	30	*7,92*	41	*10,82*	500	7252	38,96	28,86	53,25	39,44	右 / *Right*	80	20
P3.040.014	**LM29500L**	20	*5,28*	29	*7,66*	500	7252	25,97	19,24	37,66	27,9	左/*Left*	80	20
P3.040.012	**LM36500L**	25	*6,6*	36	*9,5*	500	7252	32,47	24,05	46,75	34,63	左/*Left*	80	20
P3.040.013	**LM41500L**	30	*7,92*	41	*10,82*	500	7252	38,96	28,86	53,25	39,44	左/*Left*	80	20
								1000 Rpm		**1450 Rpm**				

备件 / *SPARE PARTS*

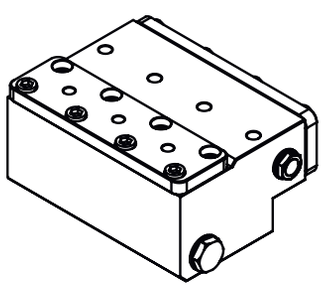

KIT - P9.040.037

泵头组件

COMPLETE HEAD OF THE PUMP

KIT - P9.039.003

油封

KIT OIL SEAL PUMP XM

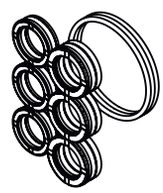

KIT - P9.003.057

柱塞密封垫圈

KIT PLUNGER SEALS

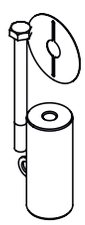

KIT - P9.004.024

陶瓷柱塞

KIT CERAMIC PISTON

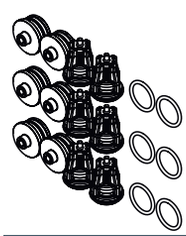

KIT - P9.001.012

阀组件

COMPLETE VALVE

KIT - P9.003.062

密封组件

KIT COMPLETE SEALS

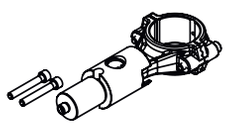

KIT - P9.041.009

预装配连接杆

PREASSEMBLED CONNECTING ROD

LM - Ø30

	转速 RPM	流量 FLOW RATE	最高压力 MAX PRESSURE	最高进水温度 MAX INPUT WATER TEMPERATURE
50 Hz	1000	45.00 - 60.00 l/min	280 Bar 4060 Psi	65°C 149° F
		11.88 - 15.84 gpm		
	1450	40.00 - 80.00 l/min		
		10.59 - 21.12 gpm		

LM - Ø40

	转速 RPM	流量 FLOW RATE	最高压力 MAX PRESSURE	最高进水温度 MAX INPUT WATER TEMPERATURE
50 Hz	1000	80.00 - 120.00 l/min	150 Bar 2175 Psi	65°C 149° F
		21.12 - 31.68 gpm		

LMX - Ø20

	转速 RPM	流量 FLOW RATE	最高压力 MAX PRESSURE	最高进水温度 MAX INPUT WATER TEMPERATURE
50 Hz	1000	20.00 - 30.00 l/min	500 Bar 7251 Psi	65°C 149° F
		5.28 - 7.92 gpm		
	1450	29.00 - 41.00 l/min		
		7.66 - 10.82 gpm		

LM Ø30 - Ø40

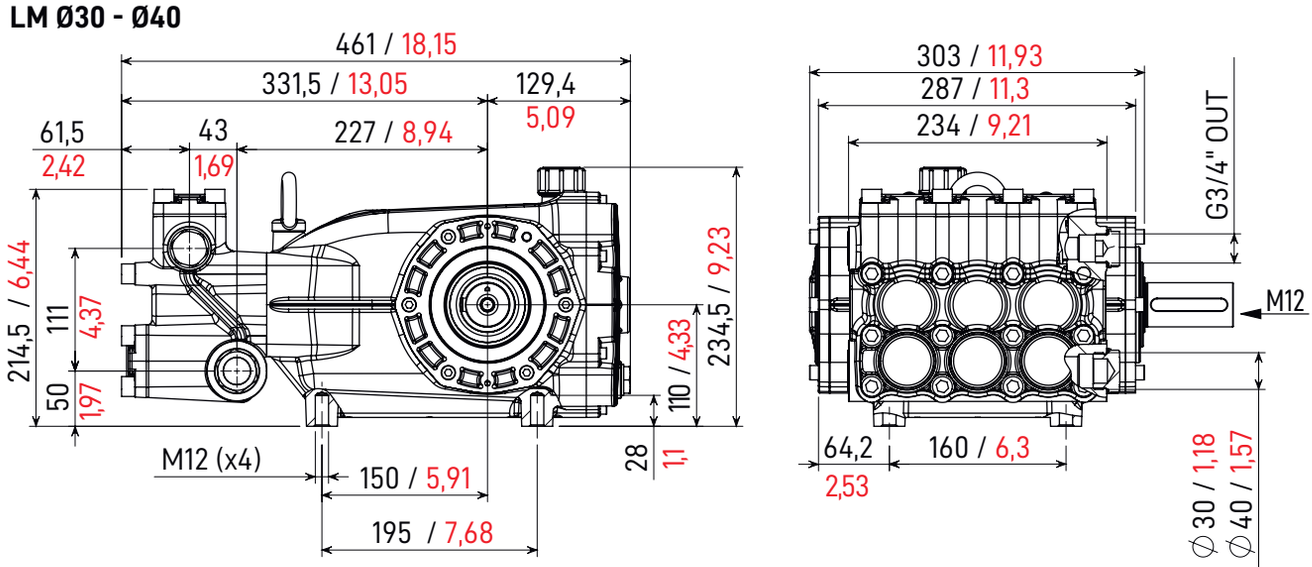

LMX Ø20

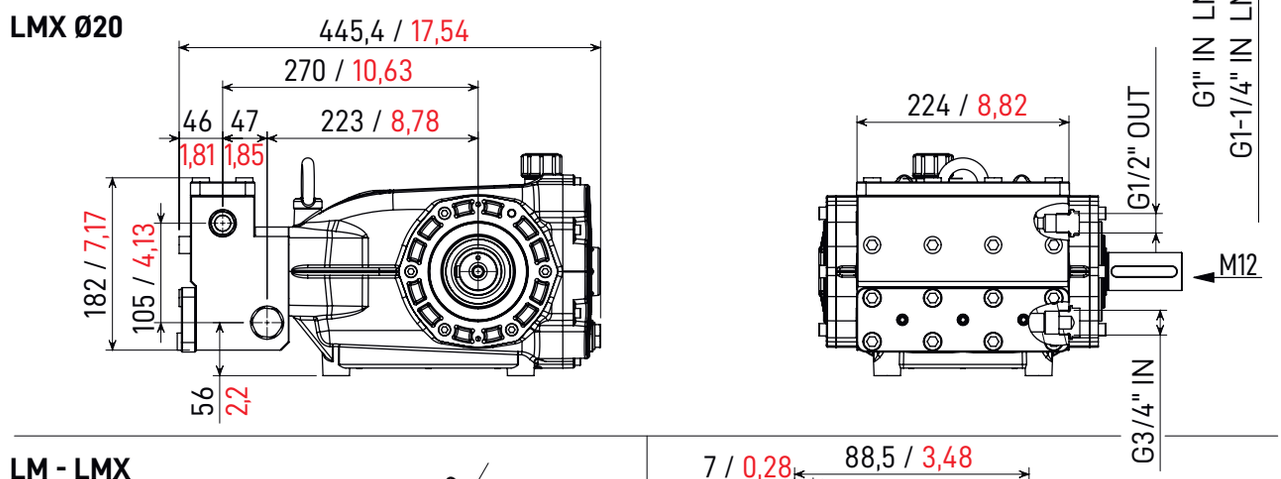

LM - LMX

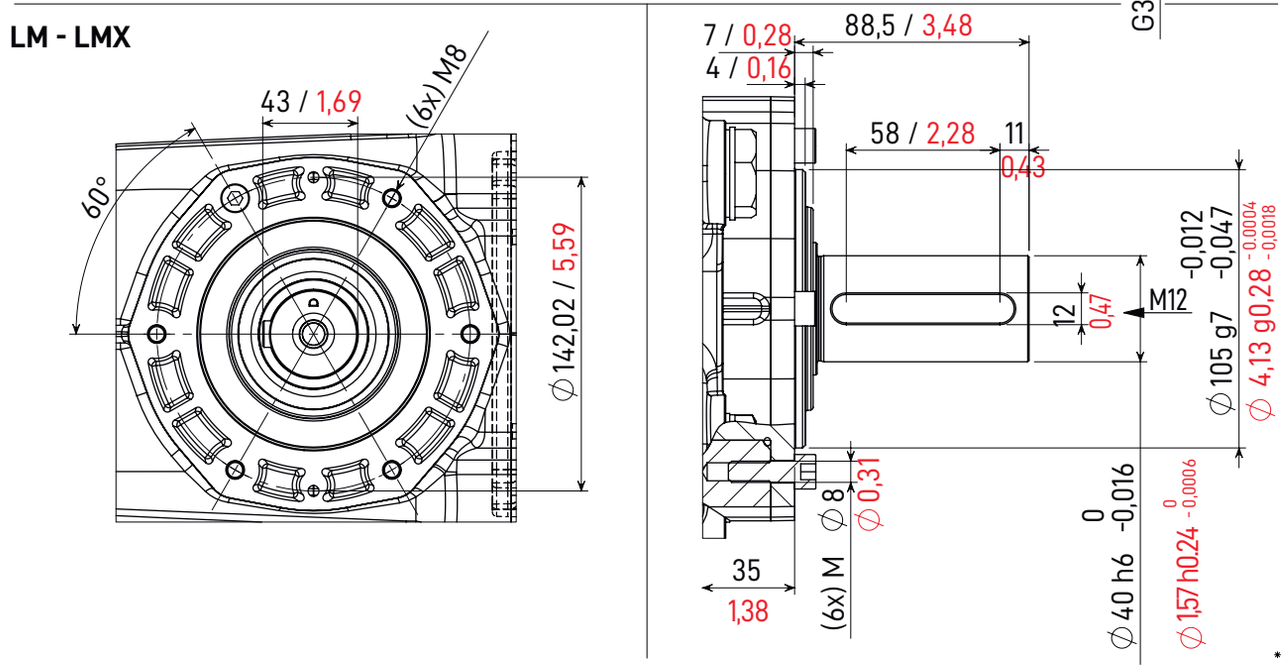

单位 / *UNITS OF MEASUREMENT*

● mm ● inch

MEC100

MEC112

MEC132

92	94	96

电机
ELECTRIC MOTORS

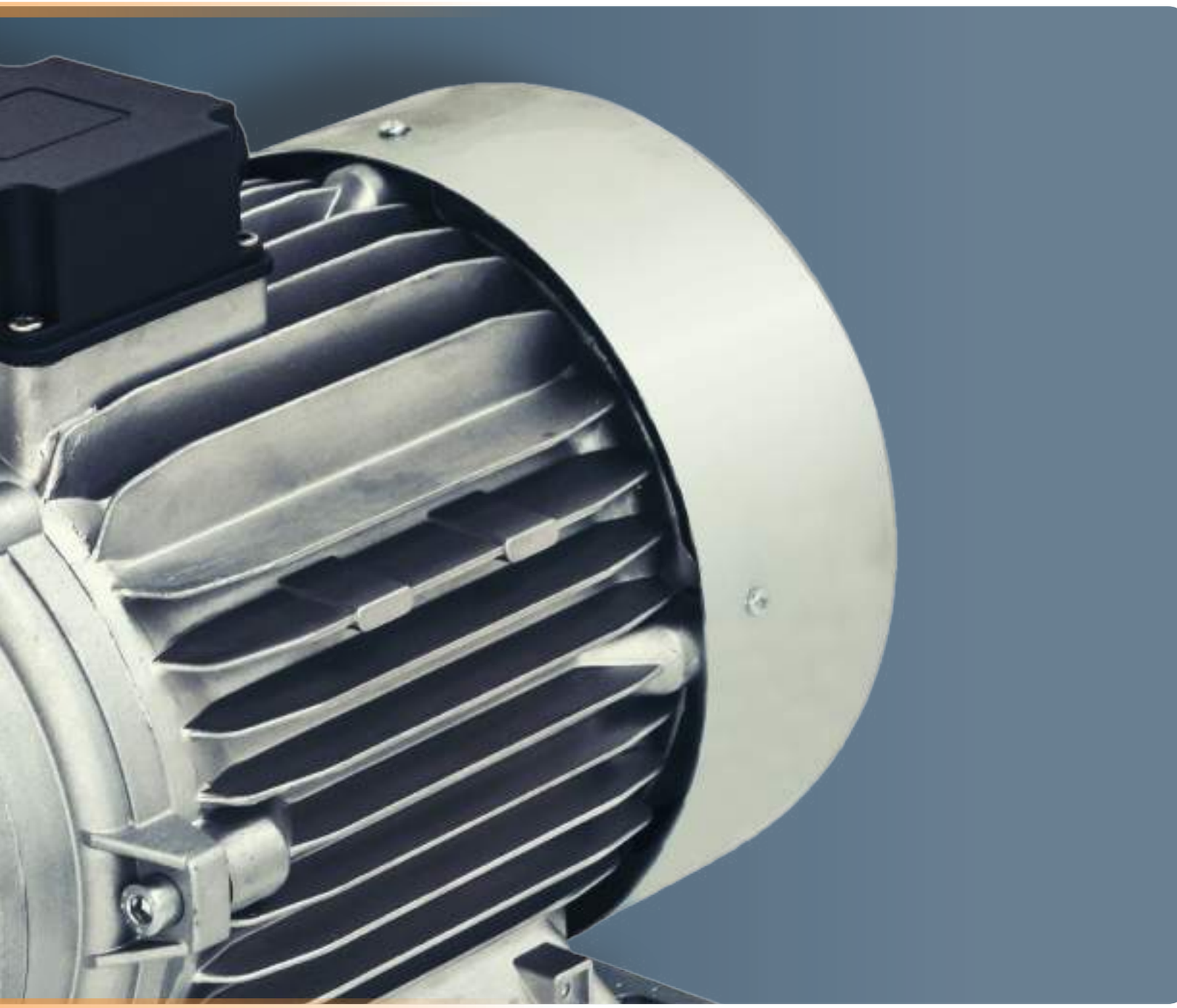

MEC160

98

MEC180

98

电机IE2 / IE3 4极
ELECTRIC MOTORS IE2/IE3 4 POLES

背景信息

目前的欧洲，50%以上的电力来自于电机。尽管现代化的电机已经能够将吸收的大部分电能转换为机械能，但是只要在技术上做一点稍稍的改进，就能够给电机带来更显著的节能效果。今天，如果我们考虑到提高电机性能可以产生的经济和环保优势，当下的高新技术就能够以最具竞争力的成本生产出更高性能的电机。新出台的欧盟指南也给出了使用和销售高效电机的要求。

技术参照

最新的高效率电机分类国际标准IEC 60034-30来定义的，该标准参考指令2005/32 / CE 进行以下分类。

标准效率-IE1(欧盟以外地区)
高效率 - IE2
三相电机必须提供
优质效率 - - IE3
从2017年1月1日开始必须提供

下图中，橙色粗体曲线在上述效率等级的范围内定义了Mazzoni电机的产品地位。
ERP DIRECTIVE 2009/125 / EC 指令要求了在设计阶段就已经对效率进行了分类，而Directive 2010/30 / EU 进一步需要节能的指示。

INFORMATIONS

The 50% of the electricity used today in Europe is employed with electric motors. Modern motors are able to convert most of the electrical power absorbed into mechanical energy but even a small improvement can lead into a very important energy saving. Today technology is able to produce high efficiency electrical motors developing high performances at a competitive cost if we consider the economic and environmental advantages that a high efficiency motor can produce. The new European directives require the use and commercialization of high efficiency motors.

TECHNICAL ASPECTS

The most recent classification of high efficiency motor is defined by the international norm IEC 60034-30 which refers to directive 2005/32/CE. The bands are designated as follow:

Standard Efficiency – IE1 (For extra UE countries)
High Efficiency – IE2
In force for three-phase motors
Premium Efficiency – IE3
Will be in force starting from 1st January 2017.

In the diagram below, the ***orange curve*** *in bold defines the placement of the production of Mazzoni electric motors in the context of efficiency classes set out above.*
The new DIRECTIVE ERP 2009/125/CE imposes the definition of the efficiency value while projecting a new motor.
The Directive 2010/30/UE extends the indication of energy saving value to domestic products using electricit
The Commission regulation EC 640/2009 obliges all European countries to respect the minimum performance dictated by EU laws. Mazzoni S.r.l. has conformed design and adjusted production

指令2009/125 / EC ErP-指令2010/30 /欧盟- 法规EC 640/2009
Directive 2009/125/CE ErP - Directive 2010/30/UE - Regulation CE 640/2009

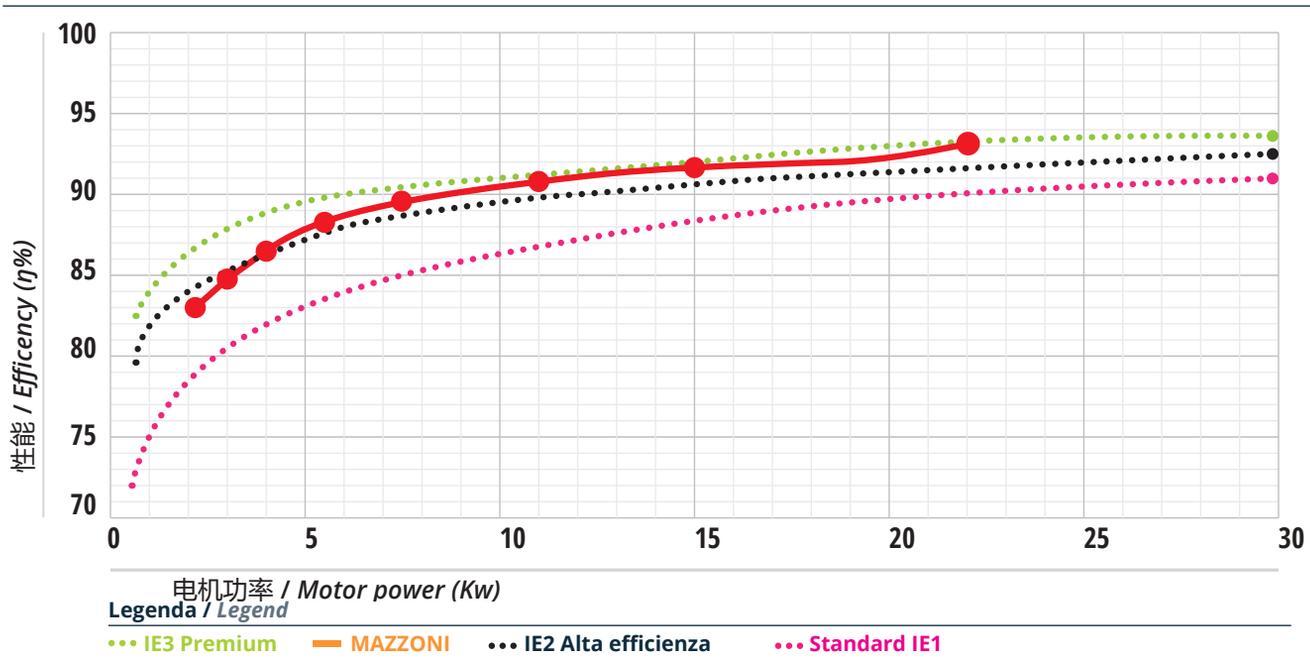

橙色曲线描绘了MAZZONI已经拥有的大功率电机产品系列在整个IE2领域中并朝着效率等级IE3靠拢

Orange line is profiled in a field entirely in IE2 , pushing forward to the efficiency class of IE3 for motors of higher power, which are already available.

指令2010/30 /UE将节能值的指示扩展到需要用电的家用电器。
欧盟委员会EC 640/2009法规要求所有欧洲国家遵守欧盟法律规定的最低性能。Mazzoni S.r.l. 从产品设计到生产也都调整到了欧盟标准。这些电机的高效率必然意味着在满载时具有高功率因数，从而限制了无功功率。
我们的生产措施可以确保：能源效率，电气安全，机械功能，操作安全。

a) 能源效率
效率是在规定的极限内减少电动机吸收的能量，以便向轴提供额定功率。如图50Hz三相电动机的橙色曲线所示。Mazzoni电机的设计方式使其效率进入IE2范围，最大功率的电机达到IE3范围。

b) 电器安全
在电气设计中，考虑了以下参考标准：
- CEI EN 60335-2-79,
- CEI EN 60335-1-79: 2013-01
- IEC 60204 :2016 SER

持续的监控测试和测量可确保产品性能。绕组内部的电气保护措施可阻止任何可能导致绕组烧坏的原因。

c) 机械功能
对过去出现的机械问题的仔细评估后设计了低体积弹性接头。 它位于曲轴和泵之间的联轴器中，这个接头大大减少了不可避免的振动，消除了轴向推力，吸收了由于轴未对 准而产生的震动。 集成在统一法兰中的弹性接头允许提供完整的组件，并省去了外部接头的组装或发动机和泵之间 的直接联接。 弹性联轴器还解决了在两个联轴器之间的潮湿微电路中自然触发的电流问题。
密封轴承的尺寸较大，并使用基于锂的润滑脂润滑，可在-25至+ 150°C的温度范围内良好使用。

d) 操作安全
操作安全在于设计不会对人和物造成自然损害的产品。Mazzoni s.r.l 的每个组件组装完毕以及在原型研究中都进行电气和机械测试。遵守法规和产品风险分析，确保功能安全。
我们的设计是基于多年生产经验和专业知识的结果，如果在电路中正确安装了热绕组的话，我们保证为电机提供2年的保修。.

standards. The high efficiency of these electric motors necessarily implies high power factors at full load, limiting the reactive power.
Our construction measures ensure: Energy efficiency, Electrical safety, Mechanical functionality, Operational safety.

a) Energy Efficiency
Efficiency is the reduction of the absorbed energy of the electric motor, within the regulatory limits, to supply rated power to the shaft.
Mazzoni engines were designed in such a way that their efficiency enters in the IE2 range and the largest in IE3, as shown by the orange curve in the graph below for three-phase motors at 50Hz.

b) Electrical Safety
Following norms have been taken into account in electrical design:
- CEI EN 60335-2-79,
- CEI EN 60335-1-79: 2013-01
- IEC 60204: 2016 SER
The tests and measurements of constant monitoring ensure the performance of the product. Electrical protections inside the winding guarantee possible causes they can cause the winding to burn.

c) Mechanical functionality
A careful assessment of mechanical problems that arose in the past, has led to the design of a low-bulk elastic joint. It is in the coupling between the crankshafts and pump and it has greatly reduced the inevitable vibrations, has eliminated axial thrusts and absorbed the dynamic forces due to the misalignment in the shafts. The elastic coupling integrated in the unified flange has allowed the supply of a complete component and eliminated assembly of an external joint or direct couplings between engine and pump. The elastic coupling also fulfills the problem of galvanic currents which naturally are triggered in the humid microcircuits between two coupled shafts.
The sealed bearings are largely sized and lubricated with grease based on Lithium, which allows a good use from -25 to + 150 ° C.

d) Operational safety
Operational safety consists in designing a product that does not create physical damage to people and things. Mazzoni s.r.l performs electrical and mechanical tests at the end of each assembly and for the study of prototypes. Compliance with regulations and product risk analysis guarantee functional safety.
Our design, based on years of experience and manufacturing competence allows to ensure the motors for two years, of course if the thermal connection is properly installed to the electrical circuit.

电机IE2 / IE3 4极
ELECTRIC MOTORS IE2/IE3 4 POLES

滚珠轴承
单冠滚珠轴承

轴承是密闭的，并用锂基润滑脂预润滑，工作温度在–25°到+ 150°C之间。

弹性联轴器

弹性联轴器用作带有统一法兰的电动马达和用于传递脉冲的油动泵之间的连接元件。
我们的弹性联轴器可用于保护电动泵，实际上，它们消除了因电流腐蚀轴和轴承而引起的放电现象。

绕组的热保护

电动机电源线上的电气保护可能不足以确保过载保护。 实际上，如果通风条件变差，则马达会过热，但电气条件不会改变，这会抑制线路保护。 我们可以通过在绕组上安装保护装置来解决这个问题。

1 弹性联轴器 *Elastic coupling*

2 前法兰+连接法兰 *Front flange + connection flange*

3 转子 *Rotor shaft*

4 双轴承 *Double bearing*

5 定子和机壳 *Body with stator*

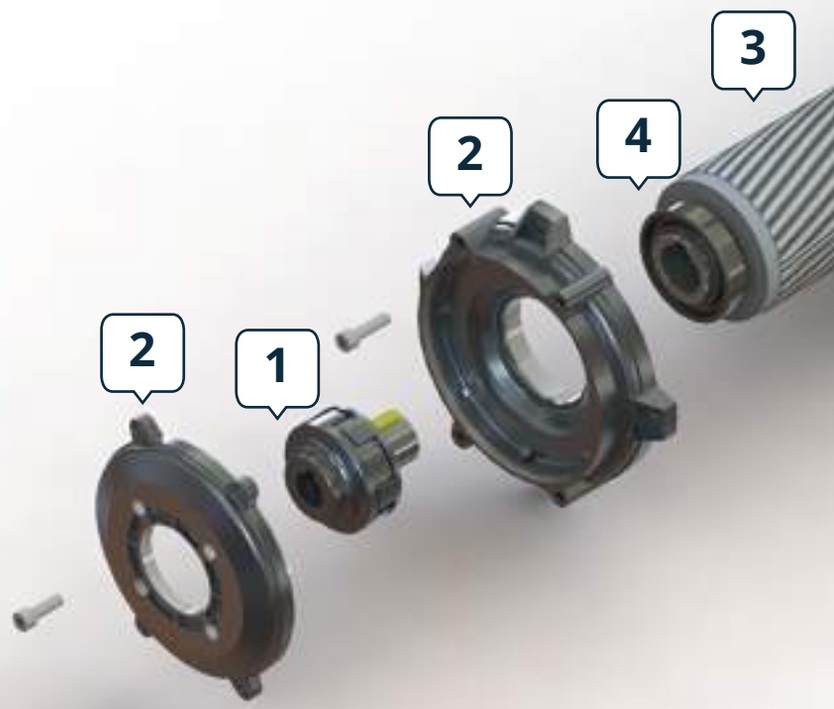

100% MADE IN ITALY

IE2 HIGH EFFICIENCY IE2 ALTO RENDIMENTO

IE3 HIGH EFFICIENCY IE3 ALTO RENDIMENTO

Express Delivery

24个月的保修
Mazzoni 的每个细节都旨在获得更好的性能并满足日益增长的市场需求。与所有其他生产商不同，如果在电路中正确安装了热绕组的话，我们的设计使我们能够为电机提供两年的保修。

快速服务
凭借我们的灵活性，我们可以在全球范围内快速交付产品，我们的仓库随时准备满足最紧迫的需求。.

Mazzoni S.r.l. - Via Prati Vecchi 5 - 4025 Cavriago (RE) - Italy | www.e-mazzoni.it | info@e-mazzoni.it

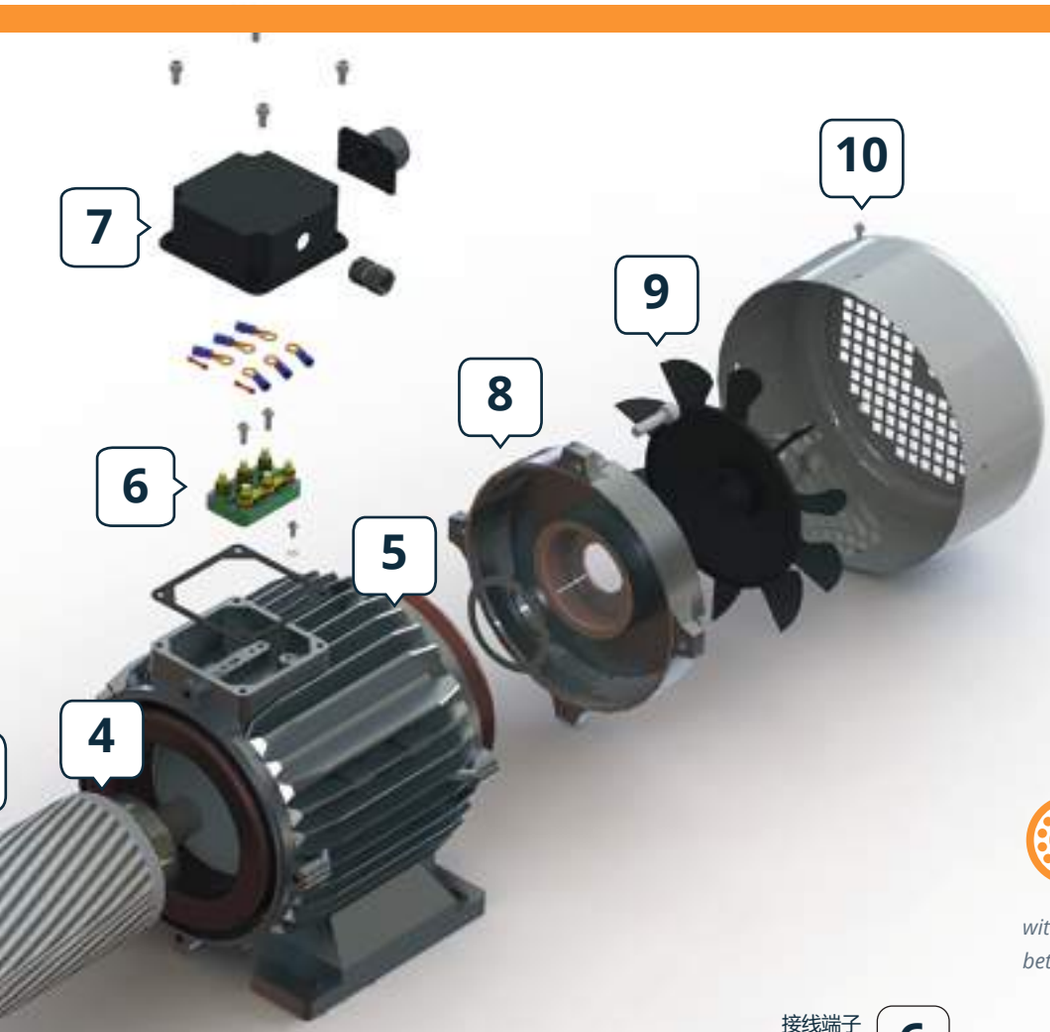

接线端子
Terminal strip **6**

接线盒盖
Basement cover base **7**

后法兰
Back flange **8**

风扇
Fan **9**

风扇罩
Fan cover **10**

BEARING

Ball-bearing with single crown.

Bearings are closed and pre-oiled with lithium grease, with a usage temperature between -25° and 150 degrees.

ELASTIC COUPLING

Elastic couplings are used as connection elements between electrical engine with unified flange and oil-dynamic pump for the transmission impulse.
Our elastic couplings are useful for the safeguard of the motor pump, in fact they eliminate phenomenon of electro-discharge which is caused by galvanic currents that erode shafts and bearings.

THERMAL PROTECTION IN THE WINDINGS

Electrical protections that are on the alimentation lines of the engine couldn't be enough to ensure the over-loaded protection. In fact, if ventilation conditions get worse, the engine overheats but the electrical conditions don't change and this prevents line protections. We could solve this problem installing protections on the windings.

24 MONTHS WARRANTY

Every single detail of the new motor Mazzoni ***is designed to get better performances*** *and satisfy an increasing choosy market. Our design allows us, unlike all the other producers, to allow* ***two years warranty for our engines*** *if properly installed with thermal windings connected in the electrical circuit.*

EXPRESS SERVICE

We supply our products in every part of the globe quickly, thanks to our flexibility and our store always ready to meet most urgent needs.

电机IE2 / IE3 4极
ELECTRIC MOTORS IE2/IE3 4 POLES

MEC 100

包装 / *PACKAGING*

一件一托盘 *1 piece each pallet*	五件一托盘 *5 pieces each pallet*	十件一托盘 *10 pieces each pallet*
75 x 60 x 50 cm 59.52 x 23.62 x19.68 inch	100 x 65 x 50 cm 39.37 x 25.6 x 19.68 inch	120 x 80 x 50 cm 47.24 x 31.49 x 19.68 inch
30 kg / 66.13 lbs	150 kg / 330.69 lbs	300 kg / 661.38 lbs

MEC 112

包装 / *PACKAGING*

一件一托盘 *1 piece each pallet*	五件一托盘 *5 pieces each pallet*	十件一托盘 *10 pieces each pallet*
75 x 60 x 50 cm 59.52 x 23.62 x19.68 inch	100 x 65 x 50 cm 39.37 x 25.6 x 19.68 inch	120 x 80 x 50 cm 47.24 x 31.49 x 19.68 inch
37 kg / 81.57 lbs	180 kg / 396.83 lbs	360 kg / 793.66 lbs

MEC 132

包装 / *PACKAGING*

两件一托盘 *2 pieces each pallet*	四件一托盘 *4 pieces each pallet*
75 x 60 x 50 cm 59.52 x 23.62 x19.68 inch	120 x 80 x 50 cm 47.24 x 31.49 x 19.68 inch
145 kg / 319.67 lbs	255 kg / 562.179 lbs

MEC 160

包装 / *PACKAGING*

一件一托盘 *1 piece each pallet*
120 x 80 x 50 cm 47.24 x 31.49 x 19.68 inch
140 kg / 308 lbs

MEC 180

包装 / *PACKAGING*

一件一托盘 *1 piece each pallet*
120 x 80 x 50 cm 47.24 x 31.49 x 19.68 inch
180 kg / 396.83 lbs

转速 / ROUNDS	相 / *PHASE*	电压 VOLT	功率 HP (Kw)	电流 A	频率 Hz
1450/1740	1	230	3 (2.2)	12.5	50/60
	3	230/400	5.5 (4)	16-9	

转速 / ROUNDS	相 / *PHASE*	电压 VOLT	功率 HP (Kw)	电流 A	频率 Hz
1450/1740	1	230	4 (3)	16	50/60
	3	230/400	5.5 (4)	15.4-8.9	
	3	230/400	7.5 (5.5)	21-12	

转速 / ROUNDS	相 / *PHASE*	电压 VOLT	功率 HP (Kw)	电流 A	频率 Hz
1450/1740	3	230/400	10 (7.5)	27.5-16	50/60
	3	400/700	15 (11)	21-12	
	3	230/400	15 (11)	35.5-20.5	

转速 / ROUNDS	相 / *PHASE*	电压 VOLT	功率 HP (Kw)	电流 A	频率 Hz
1450/1740	3	400/700	20 (15)	27.7-16	50/60

转速 / ROUNDS	相 / *PHASE*	电压 VOLT	功率 HP (Kw)	电流 A	频率 Hz
1450/1740	3	400/700	30 (22)	39.5-23	50/60

MEC 100

2年质保

弹性联轴器
ELASTIC COUPLING

滚珠轴承
BALL BEARING

绕组的热保护
THERMAL PROTECTION IN THE WINDINGS

相 PHASE	电压 VOLT	功率 HP (Kw)	效率 EFFICENCY	安培 A	相角 Cos φ	频率 Hz (转速 / ROUNDS)	
1	230	3 (2.2)	83%	12.5	0.99	50 (1450 rpm)	60 (1740 rpm)
3	230/400	5.5 (4)	85%	16 - 9	0.86		

提供单相附件60mf电容器 / *Monophase version supplied with condenser 60mf included*

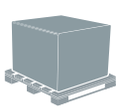

每托盘件数 / *PIECES EACH PALLET*	厘米 CM	英尺 INCH	公斤 KG	磅 LBS
1	75X60X50	29.52X23.62X19.68	30	66.13
5	100X65X50	39.37X25.6X19.68	150	330.69
10	120X80X50	47.24X31.5X19.68	300	661.38

Mazzoni S.r.l. - Via Prati Vecchi 5 - 4025 Cavriago (RE) - Italy | www.e-mazzoni.it | info@e-mazzoni.it

MEC 100

代码 Code	相 Phase	电压V	频率 Hz	安培 Ampere	功率 Hp (kW)	转速 RPM 50Hz	转速 RPM 60Hz	净重 Net weight	高压泵 Mazzoni pump
2.081.12.016	1	230	50/60	12.5	3 (2.2)	1450	1740	24	PMD
2.081.12.018	1	220	60	26	3 (2.2)	--	1740	24	PMD
2.081.12.036	1	110	60	26	3 (2.2)	--	1740	24	PMD
2.081.12.019	3	230/400	50/60	16/9.5	5.5 (4)	1450	1740	24	PMD
2.081.12.004	3	230/400	50/60	16/9.5	5.5 (4)	1450	1740	24	MMD

尺寸 / DIMENSIONS

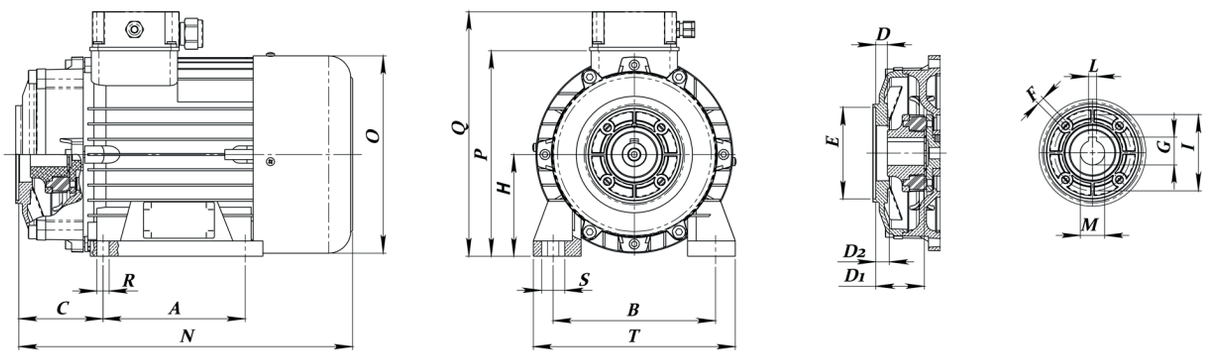

代码 Code	A	B	C	D	E	F	G	H	I	L	M	N	O	P	Q	R	S	T	D1	D2
2.081.12.016	140	160	84	11	90	7	27.3	100	75	8	24	327	194	203	242	12	22	192	50	13.5
2.081.12.019	140	160	84	11	90	7	27.3	100	75	8	24	327	194	203	242	12	22	192	50	13.5
2.081.12.004	140	160	78	6	61	10	27.3	100	88	8	24	325	194	203	242	12	22	192	45	9
2.081.12.018	140	160	84	11	90	7	27.3	100	75	8	24	327	194	203	242	12	22	192	50	13.5
2.081.12.036	140	160	84	11	90	7	27.3	100	75	8	24	327	194	203	242	12	22	192	50	13.5

弹性联轴器 / ELASTIC COUPLING

代码 Code	MEC	A	B	C	D	E	F	G	H	I
3.055.02.003	100	Ø24	Ø30	36.5	33	78.5	8	8	27.3	33

备件/ SPARE PARTS

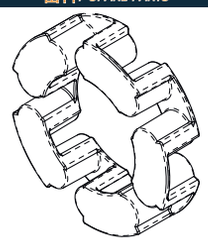

1.157.02.003
联轴器减震块
DAMPER FOR COUPLING

MEC 112

2年质保

IE2 高效率

弹性联轴器
ELASTIC COUPLING

滚珠轴承
BALL BEARING

绕组的热保护
THERMAL PROTECTION IN THE WINDINGS

单相机电附件:
- 90mf 运行电容1个
- 100mf启动电容2个
- 断路器1个

Monophase version supplied with
- *1 condenser 90mf (work)*
- *2 condensers 100mf (start)*
- *1 start condenser*

相 PHASE	电压 VOLT	功率 HP (Kw)	效率 EFFICENCY	安培 A	相角 Cos φ	频率 Hz (转速 / ROUNDS)	
1	230	4 (3)	82%	16	0.98	50 (1450 rpm)	60 (1740 rpm)
3	230/400	5.5 (4)	88%	15.4 - 8.9	0.90		
3	230/400	7.5 (5.5)	86%	21 - 12	0.85		

提供单相附件60mf电容器 / *Monophase version supplied with condenser 60mf included*

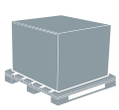

每托盘件数 / *PIECES EACH PALLET*	厘米 CM	英尺 INCH	公斤 KG	磅 LBS
1	75X60X50	29.52X23.62X19.68	37	81.57
5	100X65X50	39.37X25.6X19.68	180	396.83
10	120X80X50	47.24X31.5X19.68	360	793.66

Mazzoni S.r.l. - Via Prati Vecchi 5 - 4025 Cavriago (RE) - Italy | www.e-mazzoni.it | info@e-mazzoni.it

MEC 112

代码 Code	相 Phase	电压 V	频率 Hz	安培 Ampere	功率 Hp (kW)	转速 RPM 50Hz	转速 RPM 60Hz	净重 Net weight	高压泵 Mazzoni pumps
2.081.12.020	1	230	50/60	16	4 (3)	1450	1740	33	PMD
2.081.12.013	3	230/400	50/60	15.4 - 8.9	5.5 (4)	1450	1740	33	MMD
2.081.12.026	3	230/400	50/60	15.4 - 8.9	5.5 (4)	1450	1740	33	PMD
2.081.12.001	3	230/400	50/60	21 - 12	7.5 (5.5)	1450	1740	33	MMD
2.081.12.021	3	230/400	50/60	21 - 12	7.5 (5.5)	1450	1740	33	PMD
2.081.12.007	3	230/400	60	21 - 12	7.5 (5.5)	---	1740	33	MMD

尺寸/ DIMENSIONS

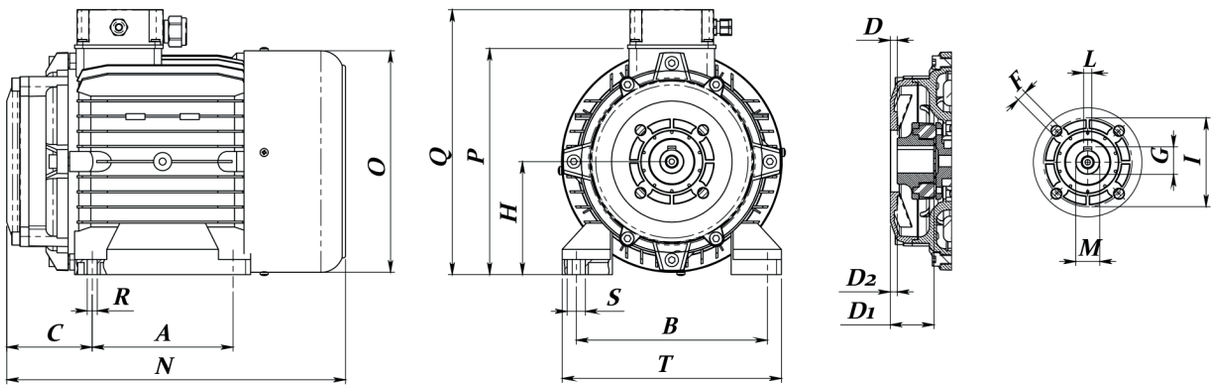

代码 Code	A	B	C	D	E	F	G	H	I	L	M	N	O	P	Q	R	S	T	D1	D2
2.081.12.020	140	190	85	11	90	7	27.3	112	75	8	24	336	218	226	265	12	22	224	50	13.5
2.081.12.013	140	190	85	6	61	10	27.3	112	88	8	24	336	218	226	265	12	22	224	45	9
2.081.12.026	140	190	85	11	90	7	27.3	112	75	8	24	336	218	226	265	12	22	224	50	13.5
2.081.12.001	140	190	85	6	61	10	27.3	112	88	8	24	336	218	226	265	12	22	224	45	9
2.081.12.021	140	190	85	11	90	7	27.3	112	75	8	24	336	218	226	265	12	22	224	50	13.5
2.081.12.007	140	190	85	6	61	10	27.3	112	88	8	24	336	218	226	265	12	22	224	45	9

弹性联轴器 / ELASTIC COUPLING

代码 Code	MEC	A	B	C	D	E	F	G	H	I
3.055.02.002	112	Ø24	Ø35	36.5	33	78.5	8	8	27.3	38

备件/ SPARE PARTS / SPARE PARTS

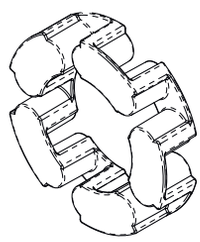

1.157.02.003

联轴器减震块

DAMPER FOR COUPLING

MEC 132

2年质保

IE2 高效率

弹性联轴器
ELASTIC COUPLING

滚珠轴承
BALL BEARING

绕组的热保护
THERMAL PROTECTION IN THE WINDINGS

相 PHASE	电压 VOLT	功率 HP (Kw)	效率 EFFICENCY	安培 A	相角 Cos φ	频率 Hz (转速 / ROUNDS)	
3	230/400	10 (7.5)	89%	27.5 - 16	0.83	50 (1450 rpm)	60 (1740 rpm)
3	230/400	15 (11)	88%	21 - 12	0.80		
3	400/700	15 (11)	90.4%	35.5 - 20.5	0.85		

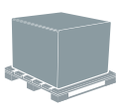

每托盘件数 / *PIECES EACH PALLET*	厘米 CM	英尺 INCH	公斤 KG	磅 LBS
2	75X60X50	29.52X23.62X19.68	145	319.67
4	120X80X50	47.24X31.5X19.68	255	562.17

MEC 132

1740

代码 Code	相 Phase	电压 V	频率 Hz	安培 Ampere	功率 Hp (kW)	转速 / RPM 50Hz	转速 / RPM 60Hz	净重 Net weight	高压泵 Mazzoni Pumps
2.081.12.002	3	230/400	50/60	27.5 - 16	10 (7.5)	1450	1740	54	MMD
2.081.12.027	3	230/400	50/60	27.5 - 16	10 (7.5)	1450	1740	54	GM/XM - L.45mm
2.081.12.003	3	400/700	50/60	21 - 12	15 (11)	1450	1740	64	MMD
2.081.12.010	3	400/700	50/60	21 - 12	15 (11)	1450	1740	64	GM/XM - L.45mm
2.081.12.015	3	230/400	50/60	35.5 - 20.5	15 (11)	1450	1740	64	MMD
2.081.12.017	3	400/700	50/60	21 - 12	15 (11)	1450	1740	64	GM/XM - L.55mm
2.081.12.028	3	230/400	50/60	35.5 - 20.5	15 (11)	1450	1740	64	GM/XM - L.45mm
2.081.12.029	3	230/400	50/60	35.5 - 20.5	15 (11)	1450	1740	64	GM/XM - L.55mm

尺寸 / DIMENSIONS

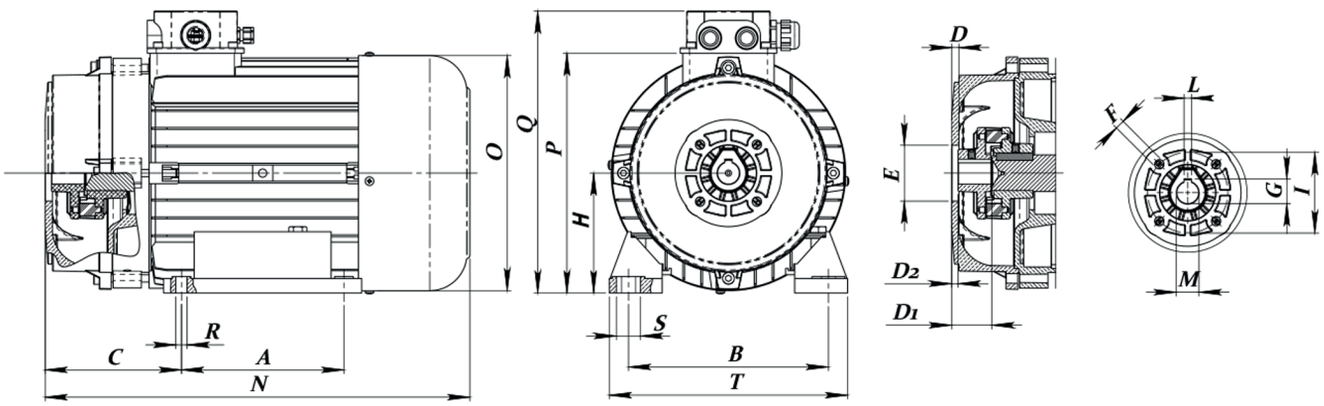

代码 / Code	A	B	C	D	E	F	G	H	I	L	M	N	O	P	Q	R	S	T	D1	D2
2.081.12.002	178	216	150	5	61	10	27.3	132	88	8	24	463	256	264	309	12	28	259	45	8
2.081.12.003	178	216	150	5	61	10	27.3	132	88	8	24	463	256	264	309	12	28	259	45	8
2.081.12.010	178	216	155	3	61	9	27.3	132	88	8	24	468	256	264	309	12	28	259	50	14
2.081.12.027	178	216	160	3	61	9	28.3	132	88	8	24	480	256	264	309	12	28	259	50	14
2.081.12.015	178	216	150	5	61	10	27.3	132	88	8	24	463	256	264	309	12	28	259	45	8
2.081.12..017	178	216	160	5	61	9	27.3	132	88	8	24	480	256	264	309	12	28	259	57	21
2.081.12.028	178	216	160	3	61	9	27.3	132	88	8	24	480	256	264	309	12	28	259	50	14
2.081.12.029	178	216	160	5	61	9	27.3	132	88	8	24	480	256	264	309	12	28	259	57	21

弹性联轴器 / ELASTIC COUPLING

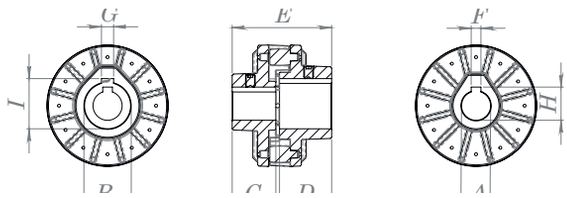

代码 Code	MEC	A	B	C	D	E	F	G	H	I
3.055.02.001	132	Ø24	Ø38	36	43	81	8	10	27.3	41.3
3.055.02.005	132	Ø25	Ø38	36	43	81	8	10	28.3	41.3

备件/ SPARE PARTS / SPARE PARTS

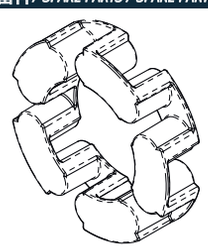

1.157.02.004
联轴器减震块
DAMPER FOR COUPLING

MEC 160 - MEC 180

2年质保

IE2 高效率

弹性联轴器
ELASTIC COUPLING

滚珠轴承
BALL BEARING

绕组的热保护
THERMAL PROTECTION IN THE WINDINGS

MEC	相 PHASE	电压 VOLT	功率 HP (Kw)	效率 EFFICENCY	安培 A	相角 Cos φ	频率 Hz (转速 / ROUNDS)	
160	3	400/700	20 (15)	90.6%	27.7 - 16	0.85	50 (1450 rpm)	60 (1740 rpm)
180	3	400/700	30 (22)	92.3%	39.5 - 23	0.91	50 (1450 rpm)	60 (1740 rpm)

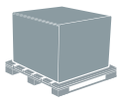

MEC	每托盘件数 / *PIECES EACH PALLET*	厘米 CM	英尺 INCH	公斤 KG	磅 LBS
160	1	120X80X50	47.24X31.49X19.68	140	308.64
180	1	120X80X50	47.24X31.49X19.68	180	396.83

MEC 160 - MEC 180

代码 *Code*	相 *Phase*	电压 V	频率 Hz	安培 Ampere	功率 Hp (kW)	转速RPM 50Hz	转速RPM 60Hz	净重 *Net weight*	高压泵 *Mazzoni Pumps*
2.081.12.030	3	400/700	50/60	27.5 - 16	20 (15)	1450	1740	54	GM - XM - LM
2.081.12.031	3	230/400	50/60	27.5 - 16	30 (22)	1450	1740	54	GM - XM - LM

尺寸 / *DIMENSIONS*

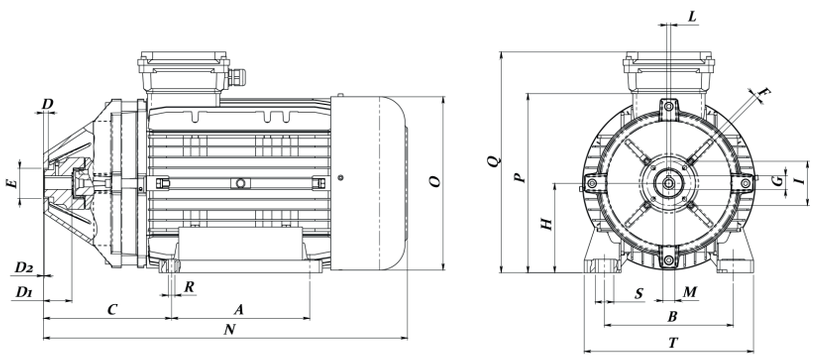

高压泵
Mazzoni Pumps
GM - XM

代码 / *Code*	Mod.	A	B	C	D	E	F	G	H	I	L	M	N	O	P	Q	R	S	D1	D2
2.081.12.030	MEC160	254	257	559	10	61	313	27.3	160	88	8	24	695	310	321	405	12	57	2	8
2.081.12.031	MEC180	279	257	260	10	61	342	27.3	180	88	8	24	735	349	361	445	13	57	2	8

弹性联轴器 / *ELASTIC COUPLING*

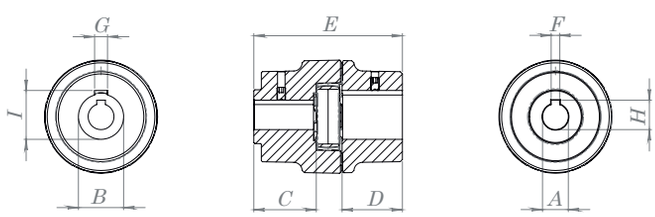

代码 *Code*	MEC	A	B	C	D	E	F	G	H	I
3.055.02.010	160	Ø24	Ø42	55.5	56	138	8	12	27.3	45.30
3.055.02.009	180	Ø24	Ø48	58	58	138	8	14	27.3	51.8

备件/ *SPARE PARTS*

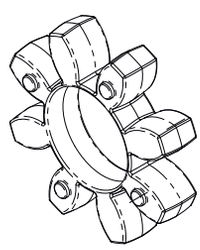

1.157.02.004
联轴器减震块
DAMPER FOR COUPLING

液压驱动高压泵

HYDRAULIC MOTORPUMPS

电机和泵组
MOTOR AND PUMP UNITS

带电控盒的电动泵
ELECTRIC PUMPS WITH ELECTRICAL BOX

103

电动泵
ELECTRIC PUMPS

103

可逆液压马达驱动泵
REVERSIBLE HYDRAULIC MOTORPUMPS

代码 *CODE*	型号 *MODEL*	转速 ROUNDS	流量 *FLOW RATE*		压力 *PRESSURE*		功率 *POWER*		液压马达 *HYDRAULIC MOTOR*	所需油压 *OIL PRESSURE REQUIRED*	
		Rpm	**L/min**	**Gpm**	**Bar**	**Psi**	**Hp**	**Kw**	**cc**	**Bar - l/min**	**Psi - Gpm**
直接连接 / *DIRECT CONNECTION*											
3.006.42.001	PMD15200HY	1450	15	4	200	2900	7.79	5.81	23	150 - 36	2175 - 9.51
3.006.42.002	MMD15200R-HY	1450	15	4	200	2900	6.25	5.06	23	150 - 36	2175 - 9.51
3.006.42.003	MMD21200R-HY	1450	21	5.5	200	2900	8.75	6.52	23	170 - 36	2465 - 9.51

其他马达也可应要求提供 / *Other engines are also available on request.*

代码 *CODE*	型号 *MODEL*	转速 *ROUNDS*	流量 *FLOW RATE*		压力 *PRESSURE*		功率 *POWER*		液压马达 *HYDRAULIC MOTOR*	所需油压 *OIL PRESSURE REQUIRED*	
		Rpm	**L/min**	**Gpm**	**Bar**	**Psi**	**Hp**	**Kw**	**cc**	**Bar - l/min**	**Psi - Gpm**
结合弹性联轴器 / *WITH ELASTIC COUPLING*											
3.006.42.008	MMD15200R	1450	15	4	200	2900	6.25	4.66	23	100 - 36	1450 - 9.5
3.006.42.007	MMD21200R	1450	21	5.5	200	2900	8.75	6.52	23	170 - 36	2465 - 9.5
3.006.42.004	GM25300R	1450	25	6.6	300	4351	15.6	11.63	46	150 - 67	2175 - 17.7
3.006.42.009	XM15500	1450	15	4	500	7252	19	14	46	180 - 67	2610 - 17.7
3.006.42.017	LM8250R	1450	80	21.13	250	3626	52	38	71	240 - 105	3480 - 27.74

其他马达也可应要求提供 / *Other engines are also available on request.*

代码 *CODE*	型号 *MODEL*	转速 *ROUNDS*	流量 *FLOW RATE*		压力 *PRESSURE*		功率 *POWER*		液压马达 *HYDRAULIC MOTOR*	所需油压 *OIL PRESSURE REQUIRED*	
		Rpm	**L/min**	**Gpm**	**Bar**	**Psi**	**Hp**	**Kw**	**cc**	**Bar - l/min**	**Psi - Gpm**
带弹性联轴器，溢流阀，安全阀，热力阀和压力表 *With elastic coupling, by-pass valve, safety valve, thermal valve and manometer*											
3.071.32.001	MMD15200R	1450	15	4	200	2900	6.25	4.66	23	100 - 36	1450 - 9.51
3.071.32.002	MMD21200R	1450	21	5.5	200	2900	8.75	6.52	23	170 - 36	2465 - 9.5
3.071.32.004	GM54150	1450	54	14.27	150	2175	25.6	19.1	46	240 - 67	3480 - 17.7

其他马达也可应要求提供 / *Other engines are also available on request.*

MAZZONI高压泵 + 有弹性联轴器的马达 + 电控盒 + VALVOLA BYPASS CON TST + 压力表

MAZZONI PUMP + MOTOR WITH ELASTIC COUPLING + ELECRICAL BOX + BYPASS VALVE WITH TST + PRESSURE GAUGE

60 Hz 按需定制 *Supplied on request*

弹性联轴器 / *Elastic coupling*

溢流阀 / *Bypass valve*

代码/CODE	压力/PRESSURE		流量/FLOW RATE		马达 /ENGINE	功率/POWER		转速/ROUNDS	进口口径	出口口径
	Bar	Psi	L/min	Gpm	Volts-Hz	Hp	Kw	RPM	IN	OUT
3.071.02.020	1450	10	3.04	150	2175.57.00	3	2.2	230V (50) 1Ph	3/4" GAS M	M22x1.5
3.071.02.021	1450	13	3.43	170	2466.04.00	5.5	4	400V (50) 3Ph	3/4" GAS M	M22x1.5
3.071.02.033	1450	15	4.36	150	2175.57.00	5.5	4	400V (50) 3Ph	3/4" GAS M	M22x1.5
3.071.02.022	1450	15	4.36	200	2901.15.00	7.5	5.5	400V (50) 3Ph	3/4" GAS M	M22x1.5
3.071.02.023	1450	21	5.54	150	2175.57.00	7.5	5.5	400V (50) 3Ph	3/4" GAS M	M22x1.5
3.071.02.024	1450	21	5.54	200	2901.15.00	10	7.5	400V (50) 3Ph	3/4" GAS M	M22x1.5
3.071.02.025	1450	25	7.00	240	3480	15	11	400V (50) 3Ph	3/4" GAS M	M22x1.5
3.071.02.026	1450	30	8.32	200	2901.15.00	15	11	400V (50) 3Ph	3/4" GAS M	M22x1.5

其他马达也可应要求提供

Other engines are also available on request.

60 Hz 按需定制 *Supplied on request*

MAZZONI高压泵 + 有弹性联轴器的马达 + 底盖

MAZZONI PUMP + MOTOR WITH ELASTIC COUPLING + BASE COVER

弹性联轴器 / *Elastic coupling*

底盖 / *Base cover*

代码/CODE	压力/PRESSURE		流量/FLOW RATE		马达 /ENGINE	功率/POWER		转速/ROUNDS	进口口径IN	出口口径
	Bar	Psi	L/min	Gpm	Volts-Hz	Hp	Kw	RPM		OUT
3.071.02.014	1450	10	3.04	125	1813.37.00	3	2.5	230V (50) 1Ph	1/2" F	3/8" F
3.071.02.015	1450	13	3.43	170	2466.04.00	5.5	4	400V (50) 3Ph	1/2" F	3/8" F
3.071.02.010	1450	15	4.36	200	2901.15.00	7.5	5.5	400V (50) 3Ph	1/2" F	3/8" F
3.071.02.009	1450	21	5.54	150	2175.57.00	7.5	5.5	400V (50) 3Ph	1/2" F	3/8" F
3.071.02.011	1450	21	5.54	200	2901.15.00	10	7.5	400V (50) 3Ph	1/2" F	3/8" F
3.071.02.012	1450	25	7.00	240	3481.30.00	15	11	400V (50) 3Ph	3/4" F	1/2" F
3.071.02.013	1450	30	8.32	200	2901.15.00	15	11	400V (50) 3Ph	3/4" F	1/2" F
3.071.02.149	1450	15	4.36	500	7252.28.00	20	15	400V (50) 3Ph	1/2" F	3/8" F
3.071.02.150	1450	21	5.54	500	7252.28.00	30	22	400V (50) 3Ph	1/2" F	3/8" F
3.071.02.151	1450	43	11.35	170	2466.04.00	20	15	400V (50) 3Ph	3/4" F	1/2" F
3.071.02.127	1450	63	17.04	150	2175.57.00	30	22	400V (50) 3Ph	3/4" F	1/2" F
3.071.02.153	1450	90	14.26	130	1885.49.00	30	22	400V(50) 3Ph	1" F	1/4" F

其他马达也可应要求提供

Other engines are also available on request.

小型热水器	中型热水器	大型热水器	超大型热水器
SMALL HEATERS	MEDIUM HEATERS	BIG HEATERS	MAXI HEATERS
108	110	112	114

Mazzoni S.r.l. - Via Prati Vecchi 5 - 4025 Cavriago (RE) - Italy | www.e-mazzoni.it | info@e-mazzoni.it

高压热水器
HIGH PRESSURE HEATERS

带电控盒的柴油热水器
DIESEL WITH ELECTRICAL BOX

116

石油液化气和天然气热水器
LPG AND METHANE

124

电热锅炉
ELECTRIC

128

热水器
HEATERS

按需定制不同压力的热水器
On demand heaters with different pressures or flow

小型热水器 / *SMALL HEATERS*

流量 *FLOW RATE*	压力 / *PRESSURE*	
	MIN	MAX
15 L/min 3.9 Gpm	**3 Bar 43.51 Psi**	**250 Bar 3625.94 Psi**

中型热水器 / *MEDIUM HEATERS*

流量 *FLOW RATE*	压力 / *PRESSURE*	
	MIN	MAX
21 - 25 L/min 5.2 - 6.6 Gpm	**3 Bar 43.51 Psi**	**500 Bar 7251.89 Psi**

标准功能 / *STANDARD FEATURES*

不锈钢主体	*Stainless Steel Body*
加热器底座由压缩陶瓷纤维制成	*Heater base made of compressed ceramic fiber*
加厚盘管	*Higher coil thickness*
盘管与机座无焊缝连接	*Coil without welding where indicated*
专业燃烧器	*Professional combustion head*
柴油泵: 双管带电磁阀	*Diesel pump: double pipe with solenoid valve*
高压变压器	*High voltage transformer*
铝合金风扇	*Aluminium fan*
自动风扇马达 12V / 24V / 230V / 400V	*Autonomous fanmotor 12V / 24V / 230V / 400V*
30V / 400V 的电机带热保护	*Thermic protection on 230V / 400V motor winding*
出水口管径: 1/2"G	*Outlet: 1/2"G*
柴油喷嘴	*Diesel nozzle*
点火电极	*Ignition electrodes*
带有防水高压插头的碳纤维电缆	*Carbon cables with waterproof high voltage plugs*
铜柴油管	*Copper diesel pipe*

可选配件
Optional Accessories

- 带开关和恒温的控制板面
- 304或316不锈钢盘管
- 火焰控制光电管
- 中心环
- ***Control panel*** *with switch and thermostat*
- ***Stainless Steel 304 or 316 coil***
- ***Flame control photocell***
- ***Centering ring***

烟囱扩展装备 / *CHIMNEY EXTENTIONS*

15 - 20 - 25 - 30 - 40 LT
1.018.02.006 - H: 190mm - IN: 102x48 mm
1.018.02.007 - H: 150mm - IN: 72x72 mm
1.018.02.008 - H: 230mm - IN: 136x54 mm

防风装备 / *WIND PROTECTION*

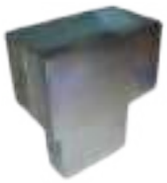

30 - 40 LT
3.037.02.007 - H: 240 mm - IN: 136x54 mm

吸烟气设备 / *SMOKES EXTRACTION VENTURI*

15 - 20 - 25 LT	30 - 40 LT
3.037.02.002 136x54mm - L: 416mm Ø 123 mm	3.037.02.006 136x54 mm - L: 375mm Ø 1973 mm

大型和超大型热水器 / *BIG AND MAXI HEATERS*

流量 *FLOW RATE*	压力 / *PRESSURE*	
	MIN	MAX
30 L/min - 40 L/min 7.9 Gpm - 10.56 Gpm	**3 Bar 43.51 Psi**	**500 Bar 7251.89 Psi**

转换头：
柴油喷嘴，点火电极，高压插头，柴油铜管，火焰控制器（可选），高压插头.

COMBUSTION HEAD:
diesel nozzle, ignition electrodes, high voltage plugs, copper diesel pipe, flame control (optional), waterproof high tension plugs.

马达风扇 (230V I 400V)：
电机带热保护
柴油泵
柴油过滤器（可选）

MOTOR FAN (230V / 400V):
termic protections on motor reels, diesel pump.
Diesel filter optional.

SMALL DIESEL 小型柴油热水器

流量 FLOW RATE	最小压力 MIN PRESSURE	最高压力 MAX PRESSURE	性能 PERFORMANCE	柴油消耗量 DIESEL CONSUMPTION
15 l/min 3.9 gpm	3 Bar 43.51 Psi	250 Bar 3625.94 Psi	50.000 Kcal/h 198.000 BTU → 58.15Kw	4.73 lt/h

在 12BAR 的柴油
压力下估计消耗量
Estimated consumption calculated at the diesel pressure of 12 bar

按需 / *ON DEMAND*

按需定制不同压力
或流量的锅炉
On demand heaters
with different pressures or flow

注释 / *NOTES*

按需定制温控器外盒
HOUSING FOR THERMOSTAT ON DEMAND
* 根据要求：提供12V DC-24V DC-220V AC-24V AC电阀
* *On demand:12V DC - 24V DC - 220V AC - 24V AC electrovalves are available*
DC: 直流电源 / *DC current*
AC: 交流电源 / *AC current*
按需卷绕，无需焊接 / *On demand coil without welding*

Mazzoni S.r.l. - Via Prati Vecchi 5 - 4025 Cavriago (RE) - Italy | www.e-mazzoni.it | info@e-mazzoni.it

代码 Code	Bar	Psi	L/min	Gpm	盘管 / Coil m	盘管 / Coil ft	导管 / Pipe 厚度/ Thickness	导管 / Pipe Ø	柴油喷嘴 Diesel Nozzle	电磁阀 Electrovalve	电机 Motor Volts-Hz	净重 Net weight Kg	净重 Net weight Lbs
3.026.02.025	250	3625.94	15	3.9	24	78.74	2.3	3/8"	1.25	12V DC	12V	45	99.2
3.026.02.026	250	3625.94	15	3.9	24	78.74	2.3	3/8"	1.25	24V DC	24V	45	99.2
3.026.02.027	250	3625.94	15	3.9	24	78.74	2.3	3/8"	1.25	24V AC*	220V (50)	44	97
3.026.02.028	250	3625.94	15	3.9	24	78.74	2.3	3/8"	1.25	24V AC*	400V (50)	44	97

包装 / PACKAGING

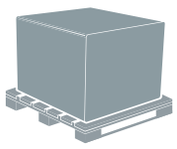

每个托盘件数 / PIECES EACH PALLET	厘米CM	英尺IN	公斤KG	磅LBS
1	66X80X120	25.9X31.4X47.2	65	143.3
4	120X80X115	47.2X31.4X45.2	205	451.9

尺寸 / DIMENSIONS

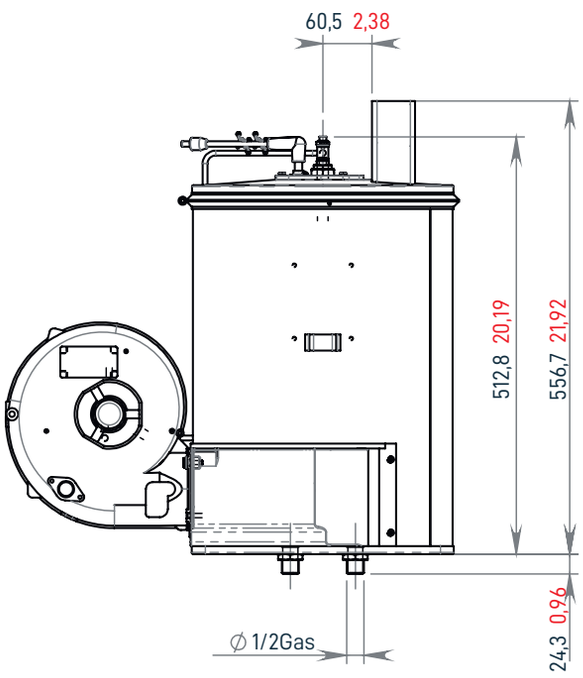

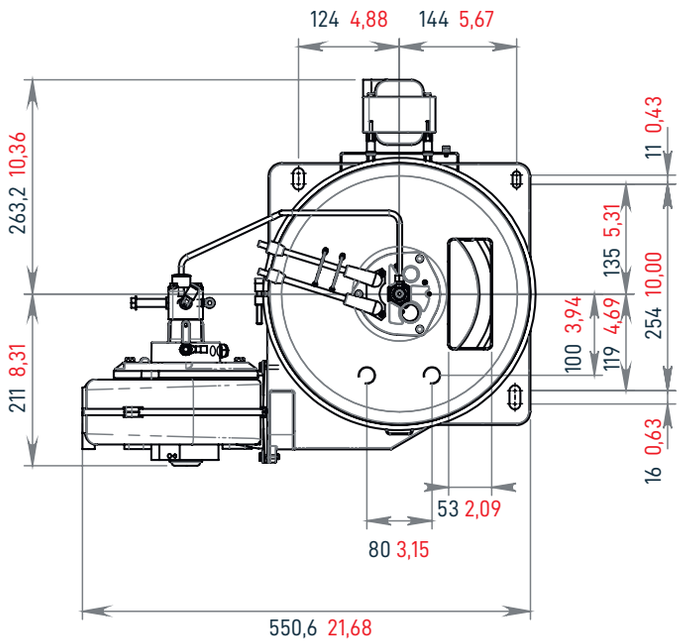

MEDIUM 中型柴油热水器
DIESEL

流量 FLOW RATE	最小压力 MIN PRESSURE	最高压力 MAX PRESSURE	性能 PERFORMANCE	柴油消耗量 DIESEL CONSUMPTION
21 - 25 l/min 5.2 - 6.6 gpm	3 Bar 43.51 Psi	500 Bar 7251.89 Psi	21lt - 80.000 Kcal/h - 317.000 BTU → 93 Kw 25lt - 90.000 Kcal/h - 357.000 BTU → 105 Kw	21 lt → 7.56 lt/h 25 lt → 8.5 lt/h

在 10BAR 的柴油
压力下估计消耗量
Estimated consumption calculated at the diesel pressure of 10 bar

按需 / *ON DEMAND*

按需定制不同压力
或流量的锅炉
On demand heaters
with different pressures or flow

注释 / *NOTES*

按需定制温控器外盒
HOUSING FOR THERMOSTAT ON DEMAND
* 根据要求：提供12V DC-24V DC-220V AC-24V AC电阀
* *On demand:12V DC - 24V DC - 220V AC - 24V AC electrovalves are available*
DC: 直流电源 / *DC current - AC: 交流电源 / AC current*
** 按需卷绕，无需焊接 / *On demand, coil without welding*

Mazzoni S.r.l. - Via Prati Vecchi 5 - 4025 Cavriago (RE) - Italy | www.e-mazzoni.it | info@e-mazzoni.it

中型柴油热水器 MEDIUM DIESEL

代码 Code	Bar	Psi	L/min	Gpm	盘管 / Coil m	盘管 / Coil ft	导管 / Pipe 厚度 / Thickness	导管 / Pipe Ø	柴油喷嘴 Diesel Nozzle	电磁阀 Electrovalve	电机 Motor Volts-Hz	净重 Net weight Kg	净重 Net weight Lbs
3.026.02.008	250	3625.94	21	5.2	35	114	2.6	3/8"	2	24V AC*	400V (50)	57	125.66
3.026.02.013	250	3625.94	21	5.2	35	114	2.6	3/8"	2	24V AC*	220V(50)	57	125.66
3.026.02.160	250	3625.94	21	52	35	114	2.6	3/8"	2	24V AC*	110(60)	57	125.66
3.026.02.038	250	3625.94	21	5.2	35	114	2.6	3/8"	2	12V DC	12V	58	127.86
3.026.02.007	250	3625.94	25	6.6	35	114	2.6	3/8"	2.25	24V AC*	400V (50)	59	130
3.026.02.014	250	3625.94	25	6.6	35	114	2.6	3/8"	2.25	24V AC*	220V (50)	59	130
3.026.02.161	250	3625.94	25	6.6	35	114	2.6	3/8"	2.25	24V AC*	110V (60)	59	130
3.026.02.019	250	3625.94	25	6.6	35	114	2.6	3/8"	2.25	24V DC	24V	58	127.86
3.026.02.020	250	3625.94	25	6.6	35	114	2.6	3/8"	2.25	12V DC	12V	58	127.86
3.026.02.057	350	5076.32	25	6.6	35	114	2.77 **	3/8"	2.25	24V AC*	220V (50)	59	130
3.026.02.055	350	5076.32	25	6.6	35	114	2.77 **	3/8"	2.25	12V DC	12V	58	127.86
3.026.02.059	500	7251.89	25	6.6	35	114	2.77 **	3/8"	2.25	24V AC*	220V (50)	59	130
3.026.02.061	500	7251.89	25	6.6	35	114	2.77 **	3/8"	2.25	24V AC*	400V (50)	59	130

包装 / PACKAGING

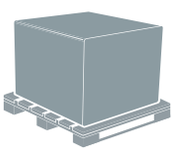

每个托盘件数 / PIECES EACH PALLET	厘米CM	英尺IN	公斤KG	磅LBS
1	66X80X120	25.9X31.4X47.2	80	176.3
4	120X80X115	47.2X31.4X45.2	265	584.2

尺寸 / DIMENSIONS

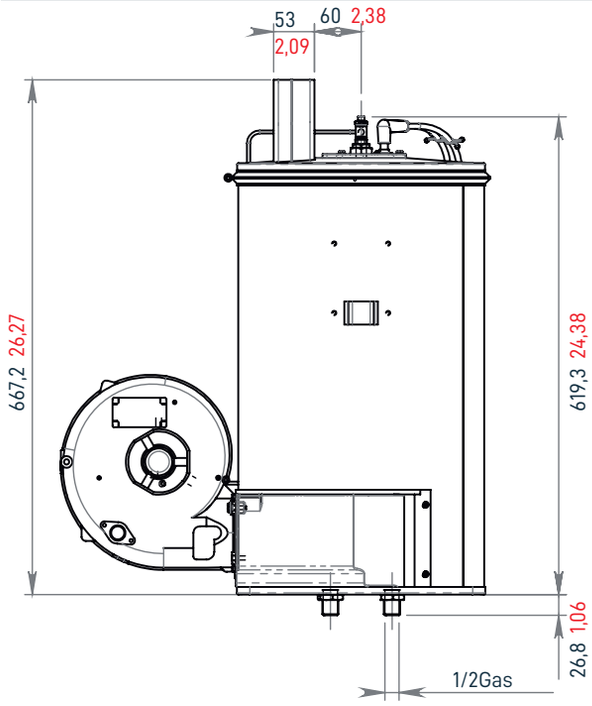

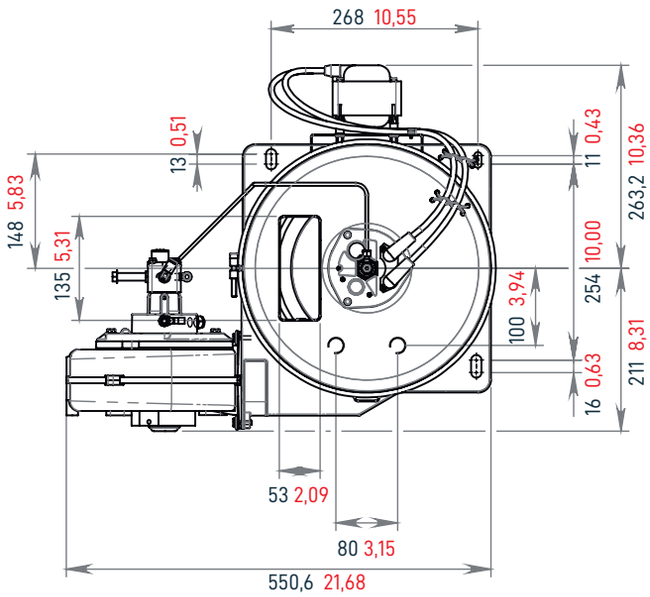

BIG DIESEL 大型柴油热水器

流量 FLOW RATE	最小压力 MIN PRESSURE	最高压力 MAX PRESSURE	性能 PERFORMANCE	柴油消耗量 DIESEL CONSUMPTION
30 l/min 7.9 gpm	3 Bar 43.51 Psi	500 Bar 7251.89 Psi	110.000 Kcal/h 436.000 BTU → 128 Kw	9.45 lt/h

在 12BAR 的柴油
压力下估计消耗量
Estimated consumption calculated at the diesel pressure of 12 bar

按需 / *ON DEMAND*

按需定制不同压力
或流量的锅炉
On demand heaters
with different pressures or flow

注释 / *NOTES*

按需定制温控器外盒
HOUSING FOR THERMOSTAT ON DEMAND
*根据要求：提供12V DC-24V DC-220V AC-24V AC电阀
* *On demand:12V DC - 24V DC - 220V AC - 24V AC electrovalves are available*
DC: 直流电源 / *DC current - AC: 交流电源 / AC current*
** 按需卷绕，无需焊接 / *On demand, coil without welding*

Mazzoni S.r.l. - Via Prati Vecchi 5 - 4025 Cavriago (RE) - Italy | www.e-mazzoni.it | info@e-mazzoni.it

代码 Code	Bar	Psi	L/min	Gpm	盘管 / Coil m	盘管 / Coil ft	导管 / Pipe 厚度 / Thickness	导管 / Pipe Ø	柴油喷嘴 Diesel Nozzle	电磁阀 Electrovalve	电机 Motor Volts-Hz	净重 Net weight Kg	净重 Net weight Lbs
3.026.02.016	350	5076.32	30	7.9	38.5	126.3	3**	1/2"	2.5	24V AC*	400V (50)	81	178.57
3.026.02.017	350	5076.32	30	7.9	38.5	126.3	3**	1/2"	2.5	24V AC*	220V (50)	81	178.57
3.026.02.030	350	5076.32	30	7.9	38.5	126.3	3**	1/2"	2.5	12V DC	12V	82	180.77
3.026.02.029	350	5076.32	30	7.9	38.5	126.3	3**	1/2"	2.5	24V DC	24V	82	180.77
3.026.02.053	500	7251.89	30	7.9	38.5	126.3	3**	1/2"	2.5	24V AC*	400V (50)	81	178.57
3.026.02.047	500	7251.89	30	7.9	38.5	126.3	3**	1/2"	2.5	12V DC	12V	82	180.77
3.026.02.051	500	7251.89	30	7.9	38.5	126.3	3**	1/2"	2.5	24V DC	24V	82	180.77

包装 / PACKAGING

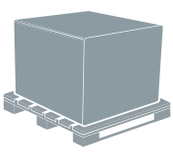

每个托盘件数 / PIECES EACH PALLET	厘米CM	英尺IN	公斤KG	磅LBS
1	66X80X117	25.9X31.4X46	96	143.3
2	120X80X115	47.2X31.4X45.2	190	451.9

尺寸 / DIMENSIONS

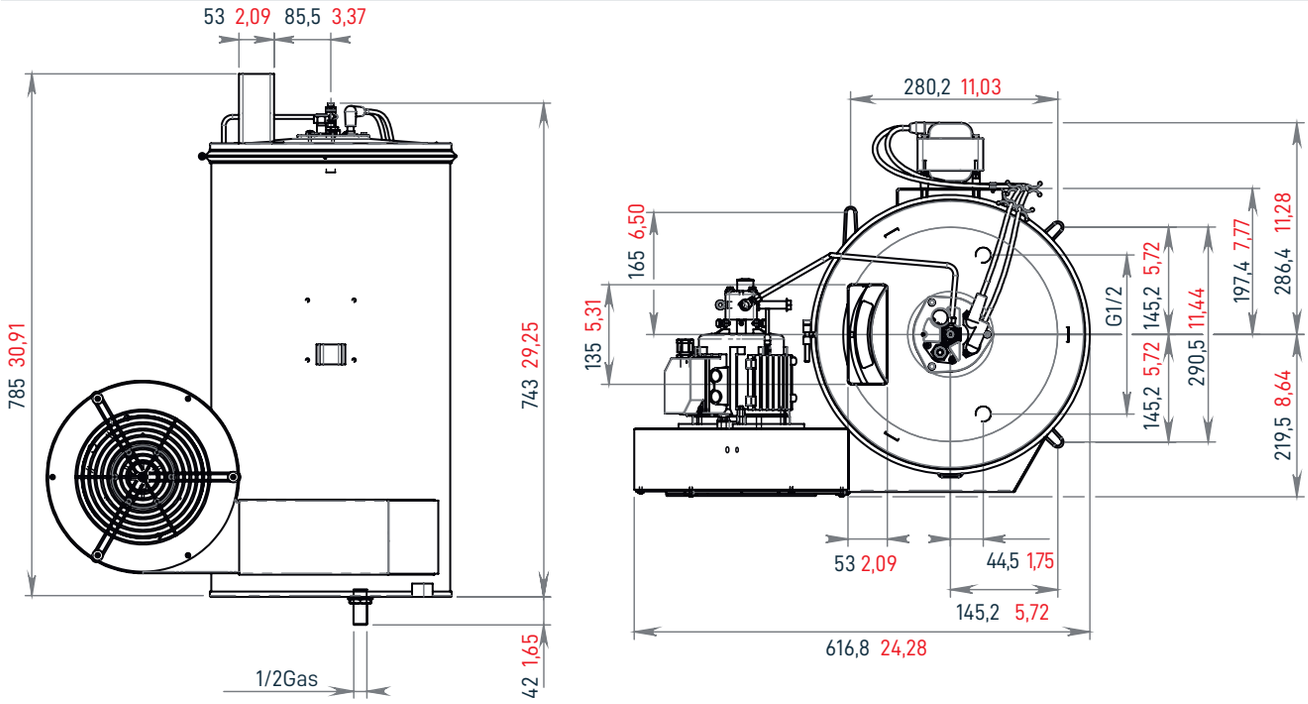

MAXI DIESEL 超大型柴油热水器

流量 FLOW RATE	最小压力 MIN PRESSURE	最高压力 MAX PRESSURE	性能 PERFORMANCE	柴油消耗量 DIESEL CONSUMPTION
40 l/min 10.56 gpm	3 Bar 43.51 Psi	500 Bar 7251.89 Psi	135.000 Kcal/h 536.000 BTU → 157 Kw	13.23 lt/h

在 13.5BAR 的柴油压力下估计消耗量

Estimated consumption calculated at the diesel pressure of 13.5 bar

按需 / *ON DEMAND*

按需定制不同压力或流量的锅炉

On demand heaters with different pressures or flow

注释 / *NOTES*

按需定制温控器外盒

HOUSING FOR THERMOSTAT ON DEMAND

* 根据要求：提供12V DC-24V DC-220V AC-24V AC电阀

* *On demand:12V DC - 24V DC - 220V AC - 24V AC electrovalves are available*

DC: 直流电源 / *DC current*

AC: 交流电源 / *AC current*

** 按需卷绕，无需焊接 / *On demand, coil without welding*

代码 Code	Bar	Psi	L/min	Gpm	盘管 / Coil m	盘管 / Coil ft	导管 / Pipe 厚度 / Thickness	导管 / Pipe ø	柴油喷嘴 Diesel Nozzle	电磁阀 Electrovalve	电机 Motor Volts-Hz	净重 Net weight Kg	净重 Net weight Lbs
3.026.02.116	500	7251.89	40	10.56	48	157	3**	1/2"	3.5	24V AC*	230V (50)	105	230
3.026.02.117	500	7251.89	40	10.56	48	157	3**	1/2"	3.5	12V DC	12V	105	230
3.026.02.118	500	7251.89	40	10.56	48	157	3 **	1/2"	3.5	24V DC	24V	105	230

包装 / PACKAGING

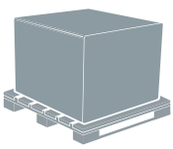

每个托盘件数 / PIECES EACH PALLET	厘米CM	英尺INCH	公斤KG	磅LBS
1	66X80X132	25.9X31.4X51.96	121	267
2	120X80X132	47.2X31.4X51.96	240	527

尺寸 / DIMENSIONS

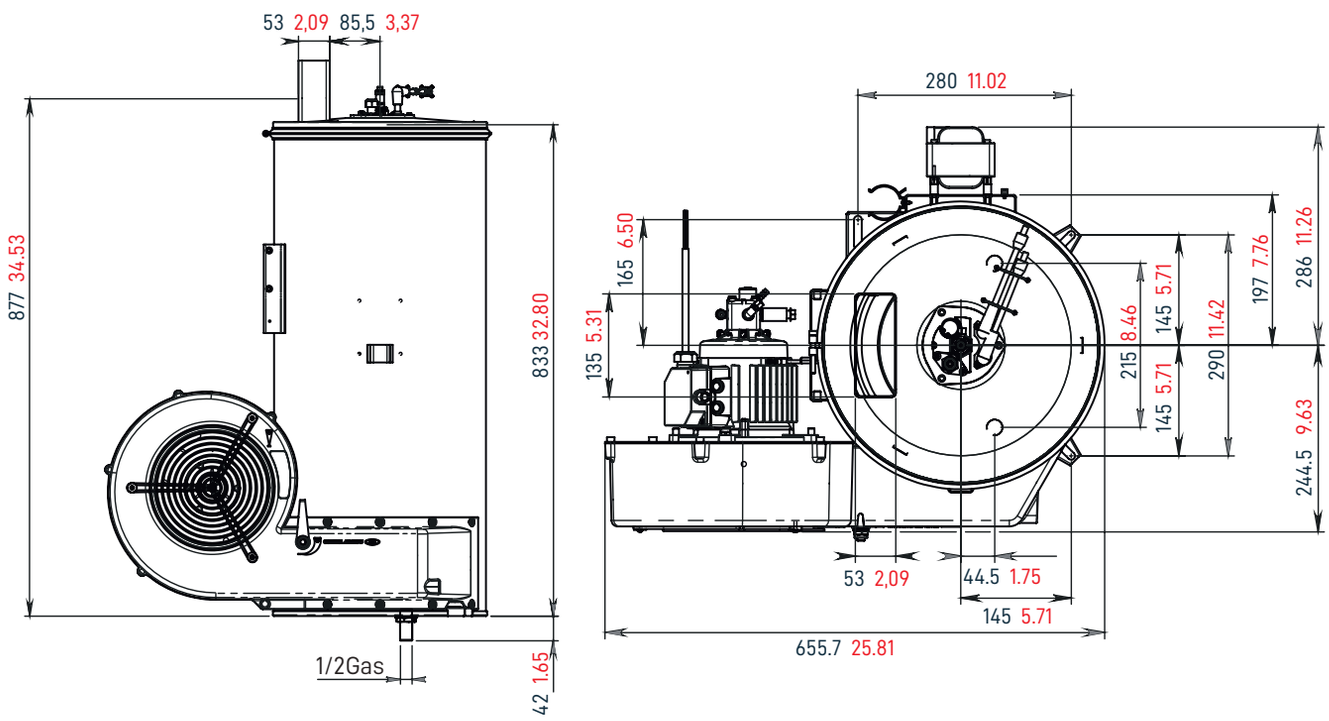

DIESEL

带电控盒的柴油热水器 / *WITH ELECTRICAL BOX*

流量 FLOW RATE	最小压力 MIN PRESSURE	最高压力 MAX PRESSURE
15 - 40 l/min **3.9 - 10.5 gpm**	**20 Bar** **290.07 Psi**	**500 BAR** **7251.89 psi**

可选-带数字温控的电控盒

OPTIONAL - Electrical box with digital thermostat

注释 / *NOTES*

按需定制不同压力
或流量的锅炉

On demand heaters
with different pressures or flow

注释 / *NOTES*

按需定制温控器外盒

HOUSING FOR THERMOSTAT ON DEMAND

* 根据要求：提供12V DC-24V DC-220V AC-24V AC电阀

* *On demand:12V DC - 24V DC - 220V AC - 24V AC electrovalves are available*

DC: 直流电源 / *DC current*

AC: 交流电源 / *AC current*

** 按需卷绕，无需焊接 / *On demand, coil without welding*

DIESEL

带电控盒的柴油热水器 / WITH ELECTRICAL BOX

代码 Code	Bar	Psi	L/min	Gpm	盘管 / Coil m	盘管 / Coil ft	导管 / Pipe 厚度 / Thickness	导管 / Pipe ø	柴油喷嘴 Diesel Nozzle	电机 Motor Volts-Hz	净重 Net weight Kg	净重 Net weight Lbs
3.026.02.037	15	3.9	250	3626.34.00	24	78.7	2.1	3/8"	1.25	12V DC	12V	53
3.026.02.066	15	3.9	250	3626.34.00	24	78.7	2.1	3/8"	1.25	24V AC	24V	53
3.026.02.067	15	3.9	250	3626.34.00	24	78.7	2.1	3/8"	1.25	24V AC	220V (50)	52
3.026.02.068	21	5.5	250	3626.34.00	35	114	2.6	3/8"	2	24V AC	220V (50)	60
3.026.02.164	21	5.5	250	3626.34.00	35	114	2.6	3/8"	2	24V AC	110V(60)	60
3.026.02.072	21	5.5	250	3626.34.00	35	114	2.6	3/8"	2	24V AC	24V	61
3.026.02.071	21	5.5	250	3626.34.00	35	114	2.6	3/8"	2	12V dc	12V	61
3.026.02.076	21	5.5	500	7252.29.00	35	114	2.6	3/8"	2.25	24V AC	220V (50)	60
3.026.02.062	25	6.6	250	3626.34.00	35	114	2.6	3/8"	2.25	24V AC	220V (50)	62
3.026.02.162	25	6.6	250	3626.34.00	35	114	2.6	3/8"	2.25	24V AC	110(60)	62
3.026.02.045	25	6.6	250	3626.34.00	35	114	2.6	3/8"	2.25	24V AC	24V	61
3.026.02.040	25	6.6	250	3626.34.00	35	114	2.6	3/8"	2.25	12V DC	12V	61
3.026.02.065	25	6.6	350	5076.32.00	35	114	2.6	3/8"	2.25	24V AC	220V (50)	62
3.026.02.063	25	6.6	350	5076.32.00	35	114	2.6	3/8"	2.25	24V AC	24V	61
3.026.02.064	25	6.6	350	5076.32.00	35	114	2.6	3/8"	2.25	12V DC	12V	61
3.026.02.042	30	7.9	350	5076.32.00	38.5	126	3	1/2"	2.5	12V DC	12V	85
3.026.02.043	30	7.9	350	5076.32.00	38.5	126	3	1/2"	2.5	24V AC	24V	85
3.026.02.046	30	7.9	350	5076.32.00	38.5	126	3	1/2"	2.5	24V AC	220V (50)	84
3.026.02.049	30	7.9	500	7252.29.00	38.5	126	3	1/2"	2.5	12V DC	12V	85
3.026.02.050	30	7.9	500	7252.29.00	38.5	126	3	1/2"	2.5	24V AC	24V	85
3.026.02.073	30	7.9	500	7252.29.00	38.5	126	3	1/2"	2.5	24V AC	220V (50)	84
3.026.02.110	40	10.56	350	5076.32.00	48	157	3	1/2"	3.5	24V AC	230V (50)	130
3.026.02.111	40	10.56	350	5076.32.00	48	157	3	1/2"	3.5	12V DC	12V	130
3.026.02.112	40	10.56	350	5076.32.00	48	157	3	1/2"	3.5	24V AC	24V	130
3.026.02.113	40	10.56	500	7252.29.00	48	157	3	1/2"	3.5	24V AC	230V (50)	130
3.026.02.114	40	10.56	500	7252.29.00	48	157	3	1/2"	3.5	12V DC	12V	130
3.026.02.115	40	10.56	500	7252.29.00	48	157	3	1/2"	3.5	24V AC	24V	130

性能和柴油消耗量 / PERFORMANCES AND CONSUMPTION

LT	GAL	KCAL/H	BTU	KW	LT/H
15	3.9	50.000	198.000	53.5	4.73
21	5.2	80.000	317.000	93	7.56
25	6.6	90.000	357.000	105	8.5
30	7.9	110.000	436.000	128	9.45
40	10.5	135.000	536.000	157	13.23

在10BAR的柴油压力下估计消耗量 / *Estimated consumption calculated at the diesel pressure of 10 bar*

进水口和出水口 / IN AND OUT

BAR	PSI	IN	OUT
250 - 350	**5076.32**	**M22 X 1.5"**	**M22 X 1.5"**
500	**7251.89**	**1/2"**	**1/2"**

包装 / PACKAGING

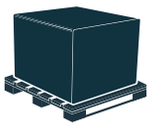

型号 / MODEL	每个托盘件数 / PIECES EACH PALLET	厘米CM	英尺IN	公斤KG	磅LBS
小型/中型 **SMALL/MEDIUM**	**1**	**66 X 80 X 120**	**25.9 X 31.4 X 47.2**	**65**	**143.3**
大型/超大型 **BIG/MAXI**	**4**	**120 X 80 X 115**	**47.2 X 31.4 X 45.2**	**205**	**451.9**

DIESEL

带电控盒的柴油热水器 / *WITH ELECTRICAL BOX*

电控盒特性 / *ELECTRICAL BOX FEATURES*

流量和压力控制开关
FLOWSWITCH AND PRESSURESWITCH

计时器
HOUR COUNTER

火焰控制器
FLAME CONTROL

低油位警告
LOW FUEL LEVEL

恒温控制
THERMOSTAT

所有柴油热水器都可以按装电控盒

MAZZONI 的所有锅炉都可以按装电控盒。 它保证了对锅炉从温度、电源、到计时器都有完全的控制。

DIESEL BOILER COMPLETE WITH ELECTRICAL BOX

Electrical box can be mounted on all Mazzoni boilers. It guarantees complete control of its functions, from temperature, supply to the hour counter.

2.100.04.013

500BAR 的锅炉可以选择按照安全阀组
Safety valve group - Optional for 500 Bar heaters

燃烧头
Combustion head

马达风扇
Fan and motor

热量单位换算表
Thermal units conversion table

换算 *To convert*	乘法 *Multiply*
kcal/h to Btu	kcal x 3.968
Btu to kcal	Btu x 0.252
kcal/h to kw/h	kcal x 0.001163
kw/h to kcal/h	kw/h x 859.9
cal to J	cal x 4187
J to cal	J x 0.2388

柴油机燃烧状态与海拔高度的关系
Diesel's combustion changes related to the altitude

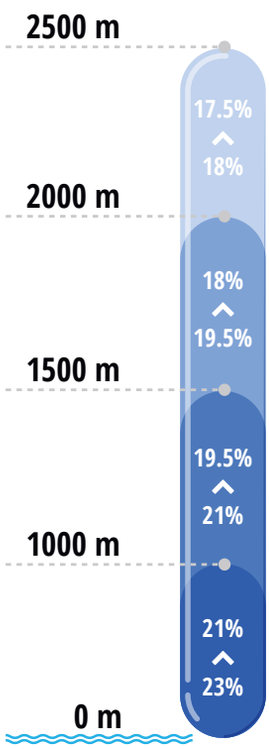

柴油热水器的燃烧状态是随海拔高度而变化的，与氧气含量的减少有关，氧气在海平面上，以每立方米21％的气体形式存在于空气中；氧气随着海拔的升高而减少，从而使空气（氧气）/燃料的混合物变贫。

征兆：
锅炉烟囱冒出黑烟。
解决方案：
1. 让更多的空气进入锅炉
2. 用减少流量的喷嘴代替燃烧器喷嘴，以减少柴油流量

The reason why the combustion of a Diesel oil burner changes with the altitude is related to the amount of oxygen, a gas present in the air in the percentage of 21% for each cubic meter, at sea level; the oxygen decreases its presence with the altitude, so impoverishing the mixture air (oxygen) / fuel.

Symptoms
Emission of black smoke from the chimney of the boiler.
Solution
1. Inlet a bigger quantity of air into the boiler.
2. Reduce the Diesel oil flow substituting the burner nozzle with a one with reduced flow.

DIESEL

带电控盒的柴油热水器 ***/ WITH ELECTRICAL BOX***

15L | 12-24V • 230V - 尺寸 / *DIMENSIONS*

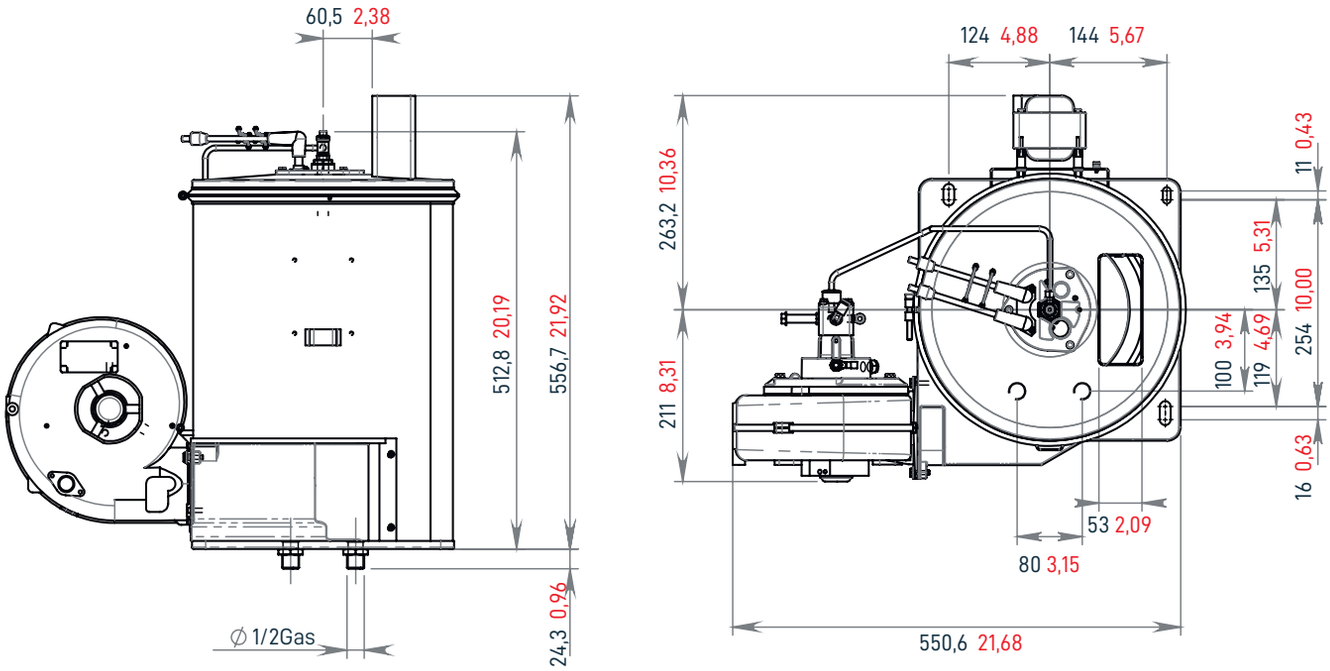

21-25L | 12-24V • 230V - 尺寸 / *DIMENSIONS*

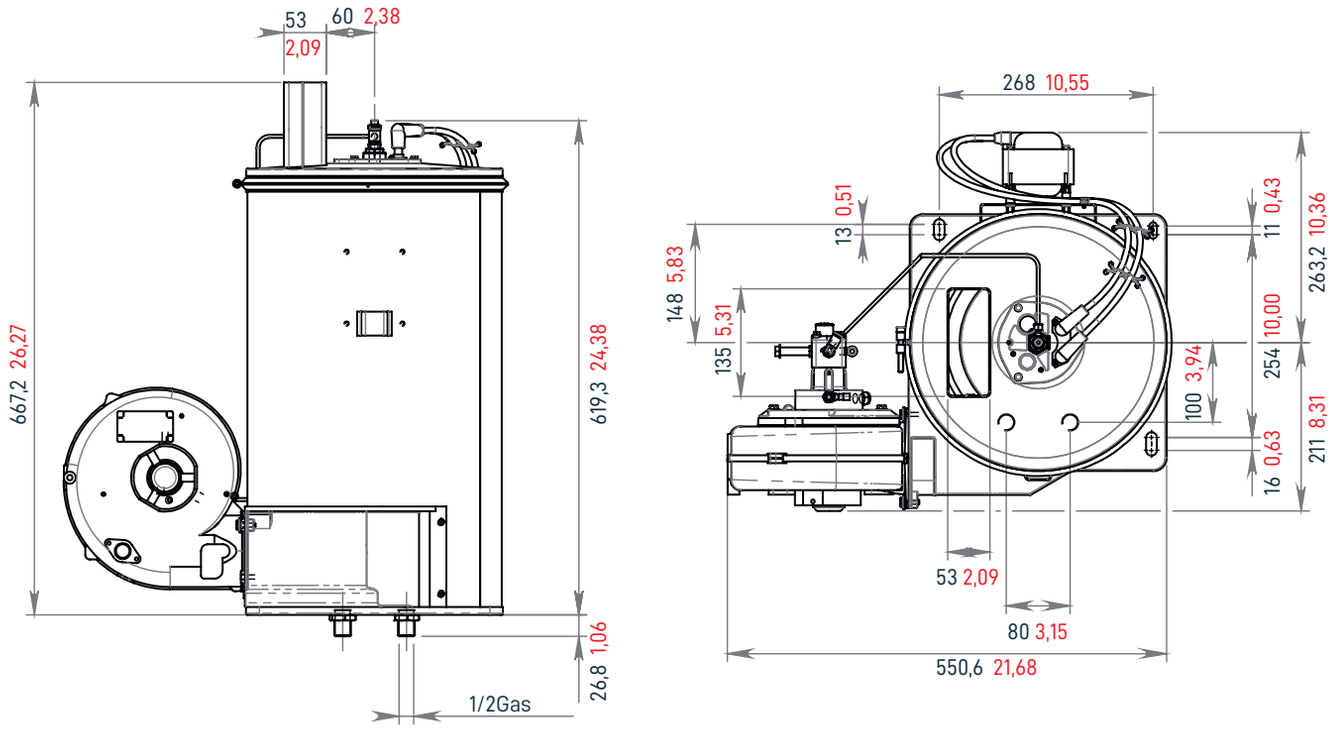

Mazzoni S.r.l. - Via Prati Vecchi 5 - 4025 Cavriago (RE) - Italy | www.e-mazzoni.it | info@e-mazzoni.it

30L | 12-24V - 尺寸 / DIMENSIONS

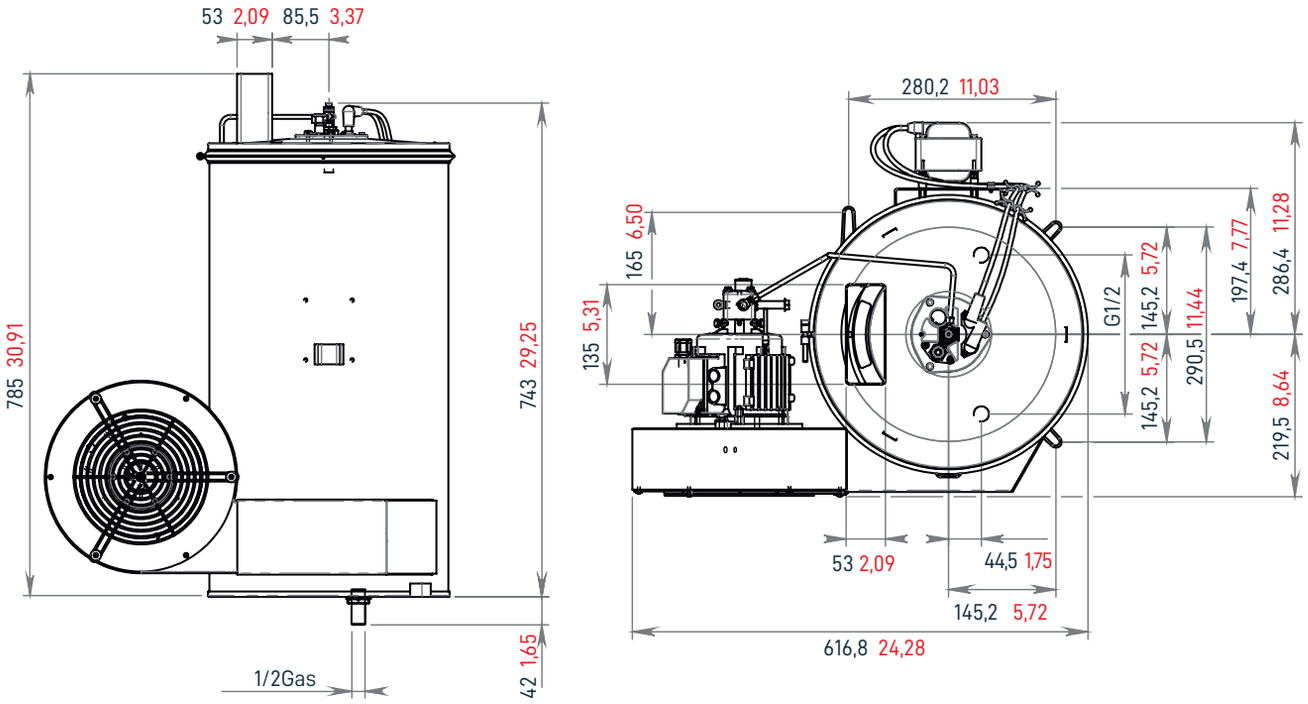

30L | 230V - 尺寸 / DIMENSIONS

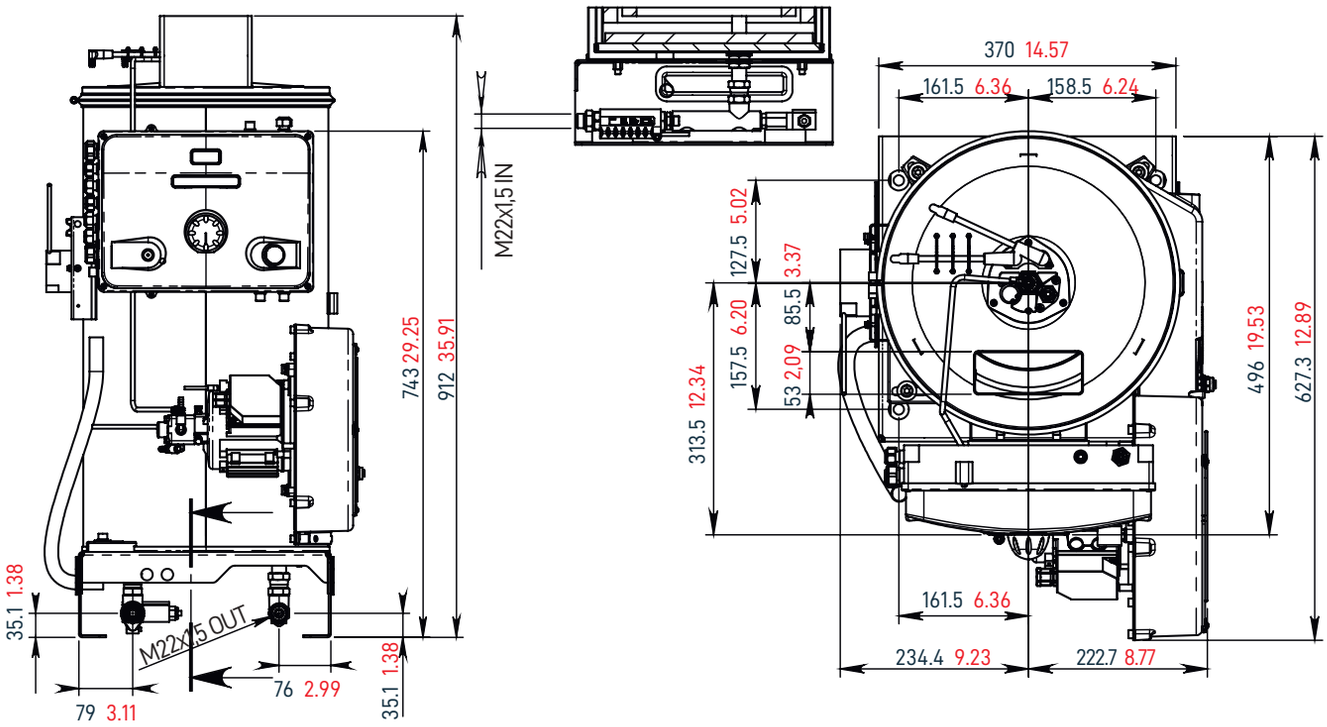

DIESEL

带电控盒的柴油热水器 ***/ WITH ELECTRICAL BOX***

40L | 12-24V • 230V - 尺寸 / *DIMENSIONS*

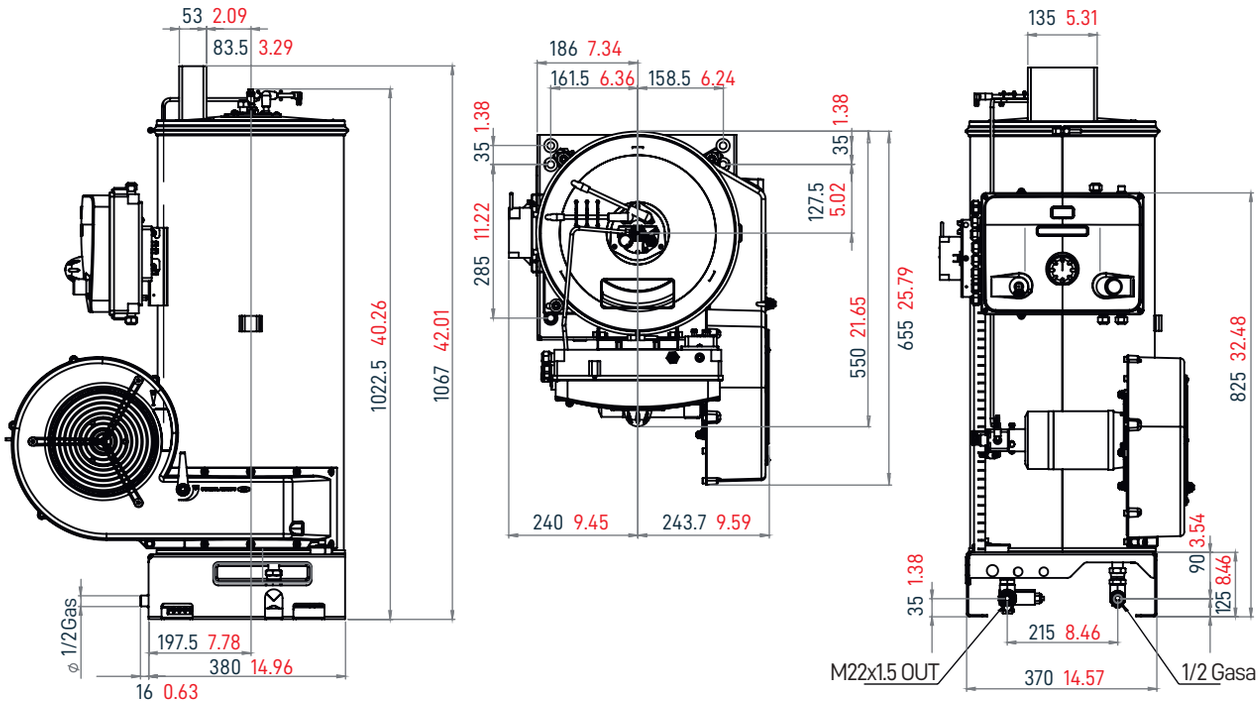

电耗
ELECTRIC ABSORPTION

	热水器尺寸 / *HEATERS SIZE*											
	15 LT			20 - 25 LT			30 LT			40 LT		
12 V	28 Amps 230 Watt	8 Amps 80 W	1 Amps	28 Amps 230 Watt	8 Amps 80 W	1 Amps	53 Amps 500 Watt	8 Amps 80 W	1 Amps	53 Amps 500 Watt	8 Amps 80 W	1 Amps
24 V	12 Amps 230 Watt	3.5 Amps 80 W	1 Amps	12 Amps 230 Watt	3.5 Amps 80 W	1 Amps	25 Amps 500 Watt	3.5 Amps 80 W	1 Amps	25 Amps 500 Watt	3.5 Amps 80 W	1 Amps
230 V	1.2 Amps	0.16 Amps	1 Amps	1.2 Amps	0.16 Amps	1 Amps	2.4 Amps	0.16 Amps	1 Amps	2.5 Amps	0.16 Amps	1 Amps
400 V	0.7 Amps	0.7 Amps	1 Amps	0.7 Amps	0.6 Amps	1 Amps	1.2 Amps	0.6 Amps	1 Amps	1.3 Amps	0.6 Amps	1 Amps

说明 / *LEGEND*

马达风扇
FAN MOTOR

高压变压器
HIGH TENSION TRANSFORMER

电控盒
ELECTRICAL BOX

GAS

带电控盒的燃气热水器 / *WITH ELECTRICAL BOX*

流量 FLOW RATE	最小压力 MIN PRESSURE	最高压力 MAX PRESSURE
15 - 30 l/min 3.9 - 7.9 gpm	20 Bar 290.07 Psi	250 Bar 3625.94 Psi

	液化石油气 / *LPG*				天然气/ *METHANE*	
	流量 FLOW RATE		压力 PRESSURE		压力 PRESSURE	
	L/min	Gpm	Bar	Psi	Bar	Psi
小型 / SMALL	15	3.9	250	3625.94	250	3625.94
中型 / MEDIUM	21	5.5	250	3625.94	250	3625.94
大型 / LARGE	30	7.9	250	3625.94	250	3625.94

包装 / PACKAGING

型号 / *MODEL*	每个托盘件数 *PIECES EACH PALLET*	厘米 CM	公斤 KG	每个托盘件数 *PIECES EACH PALLET*	厘米CM	公斤 KG
小锅炉 SMALL	1	66X80X120	60	2	120X 80X115	205
中锅炉 MEDIUM	1	66X80X120	80	2	120X 80X115	220
大锅炉 BIG/MAXI	1	66X80X120	127	2	120X 80X115	247

GAS

带电控盒的燃气热水器 / *WITH ELECTRICAL BOX*

液化石油气热水器 / *LPG SUPPLY*

代码 Code	尺寸 *Dimensions*	Bar	Psi	L/min	Gpm	Volts-Hz	°C	进气口 *Gas Inlet*	净重 *Net weight*
3.026.04.043	小型 / *Small*	250	3625.94	15	3.9	230(50)	65°(ΔT a 0°C)	25÷100 mbar	47 kg
3.026.04.039	中型 / *Medium*	250	3625.94	21	5.5	230(50)	55°(ΔT a 0°C)	25÷100 mbar	60 kg
3.026.04.040	大型 / *Large*	250	3625.94	30	7.9	230(50)	65°(ΔT a 0°C)	25÷100 mbar	85 kg

液化石油气锅炉的热值 / LHV LPG = 25.000 Kcal/Nm³

天然气热水器 / *METHANE SUPPLY*

代码 Code	尺寸 Dimensions	Bar	Psi	L/min	Gpm	Volts-Hz	°C	进气口 *Gas Inlet*	净重 *Net weight*
3.026.04.044	小型 / *Small*	250	3625.94	15	3.9	230 (50)	60° (ΔT a 0°C)	25÷100 mbar	47 kg
3.026.04.045	中型 / *Medium*	250	3625.94	21	5.5	230 (50)	50° (ΔT a 0°C)	25÷100 mbar	60 kg
3.026.04.046	大型 / *Large*	250	3625.94	30	7.9	230 (50)	60° (ΔT a 0°C)	25÷100 mbar	85 kg

天然气锅炉的热值 / LHV METHANE = 8.400 Kcal/Nm³

性能和燃气消耗量 / *PERFORMANCES AND CONSUMPTION*

	液化石油气 / *LPG*				天然气 / *METHANE*			
LT	KCAL/H	BTU	KW	NM³/H	KCAL/H	BTU	KW	NM³/H
15	55.000	218.000	63	3.5	50.000	198.000	58	10.5
21	96.000	380.000	112	3.9	92.000	365.000	107	11
30	117.000	464.000	134	4.6	115.000	456.000	124	14

盘管 / *COIL*

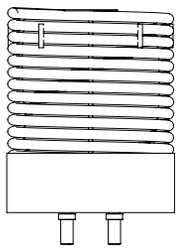

尺寸 *Dimensions*	m	ft	导管 / *Pipe* 厚度 Thickness	ø
小型 / *Small*	24	78.7	2.1 mm	3/8"
中型 / *Medium*	35	114	2.6 mm	3/8"
大型 / *Large*	38.5	126	2.77 mm	1/2"

电控盒 / *ELECTRICAL BOX*

开关控制	*On/ Off switch*
火焰控制	*Flame control*
恒温器	*Thermostat*
重置按钮	*Reset botton*
带流量和压力开关的水控制器	*Water control with flowswitch and pressureswitch*
通风控制	*Air controller*
最小和最高气压控制系统	*Min and max gas pressure control system*

GAS

带电控盒的燃气热水器 / *WITH ELECTRICAL BOX*

15L 250BAR 230V - 尺寸 / *DIMENSIONS*

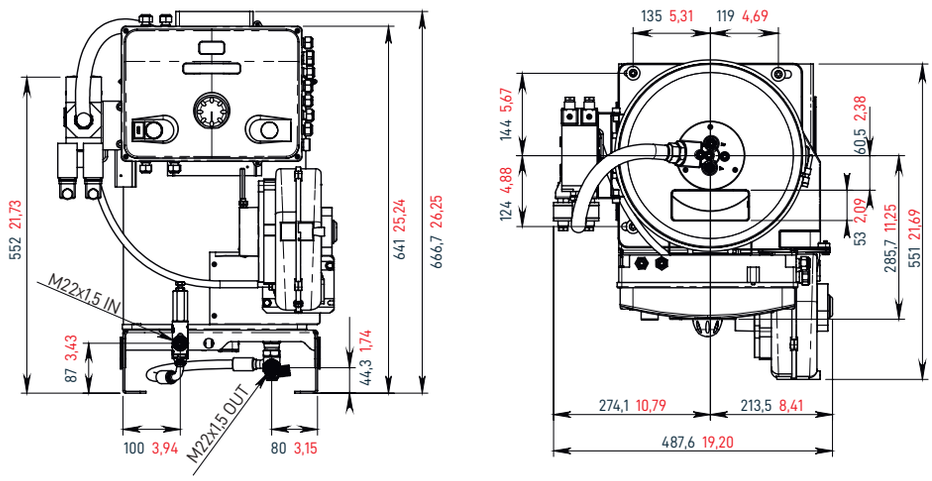

21L 250BAR 230V - 尺寸 / *DIMENSIONS*

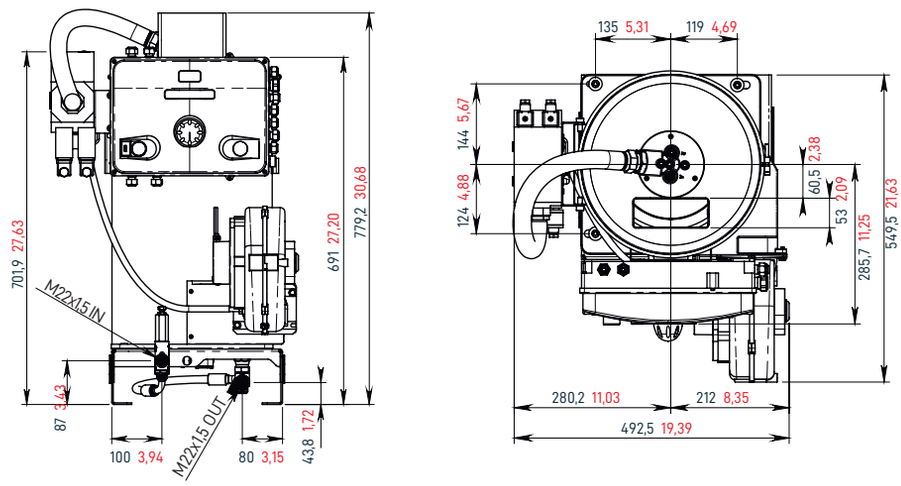

30L 250BAR 230V - 尺寸 / *DIMENSIONS*

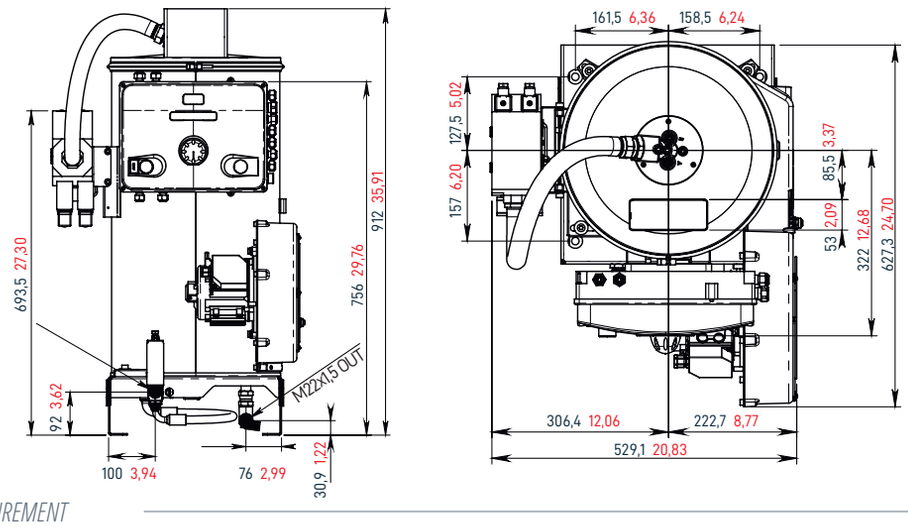

单位 / *UNITS OF MEASUREMENT*

● mm ● inch

每单位燃料的最低发热量，千卡/英热单位
Table of low calorific power of fuels in kcal/Btu

燃料 *Fuel*	最低燃烧发热量 / *Inferior calorific power*			
	kcal/kg	Btu/lb	kcal/m³	Btu/ft³
柴油 / *Diesel*	10210	18375	-	-
天然气 / *Methane*	-	-	8400	950
液化石油气 / *LPG*	-	-	25000	2830

水硬度
Hardness of water

为了避免盘管阻塞，建议在连接热水机的水龙头处测量水的硬度，如果硬度超过16法国度，我们建议安装软水器。

In order to avoid the obstruction of the coil, it is recommended to measure the hardness of water at the tap where the hot water machine will be connected, in case of hardness superior to 16 French degrees we advise to install a water softener.

换算表 / *Convertion table*			
类别 *Classification*	法国度 *French degrees*	g/m³ *(ppm)*	德国度 *German degrees*
软水 / *Light**	1 - 8	10 - 80	0.56 - 4.47
中等硬度水 / *Medium*	12 - 20	120 - 200	6.71 - 11.18
硬水 / *Hard*	24 - 32	240 - 320	13.42 - 17.89
特硬水 / *Very hard*	36 - 40	360 - 400	20.13 - 22.36

烟囱连接
Chimney connection

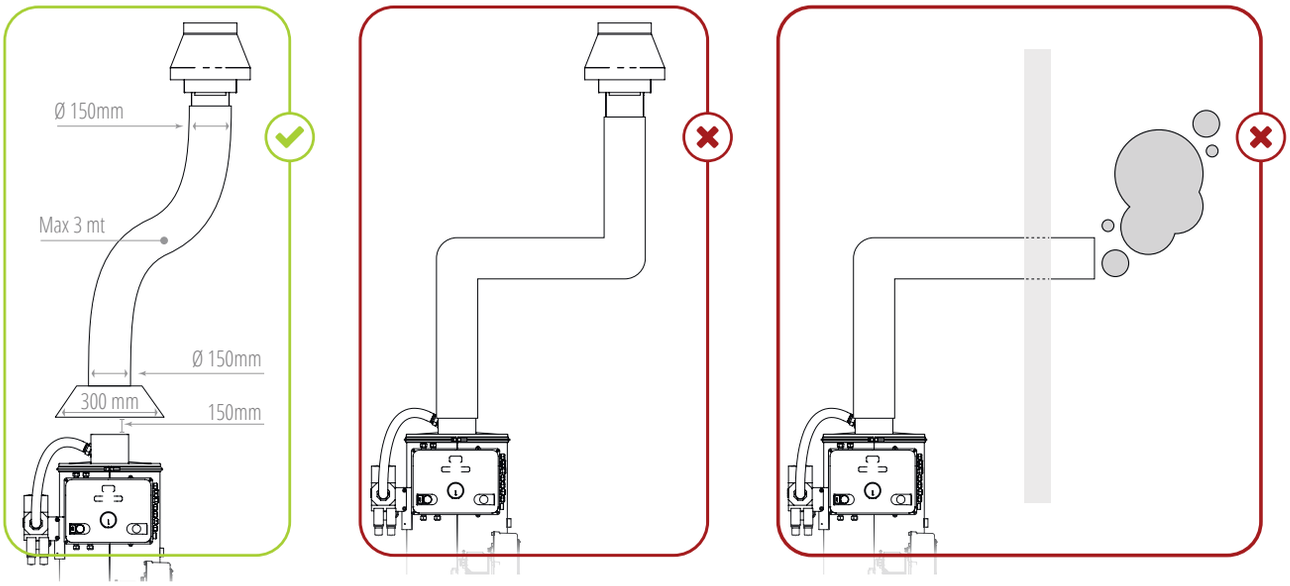

电锅炉
ELECTRIC

NEW

流量 FLOW RATE	最小压力 MIN PRESSURE	最高压力 MAX PRESSURE
12 - 13 l/min 3.17 - 3.43 gpm	1 Bar 14.50 Psi	6 Bar 87 Psi

包装 / PACKAGING

代码 / CODE	每个托盘件数 PIECES EACH PALLET	厘米 CM	公斤 KG	每个托盘件数 PIECES EACH PALLET	厘米CM	公斤 KG
3.026.04.087	1	80 X 60 X 118	31.49 X 23.62 X 46.45	45	99.20.00	205
3.026.04.092	3	120 X 80 X 115	47.24 X 31.49 X 45,27	110	242.5	247

代码 Code	最小压力 Min Pressure		最高压力 Max Pressure		流量 Flow rate		电源 Power Supply	相 Phase	耗电量 Power Consumption	净重 Net weight	
	Bar	Psi	Bar	Psi	L/min	Gpm	Volts		kW	Kg	Lbs
3.026.04.087	1	14.50	6	87	12	3.17	400	3	24	32	70.54
3.026.04.092	1	14.50	6	87	13	3.43	400	3	24	37	81.57

电锅炉
ELECTRIC

秒钟 Seconds	暖炉 Warm-Up	使用 Use
0	20	85
20	25	80
40	30	75
60	35	70
80	40	65
100	45	60
120	50	60
140	55	60
160	60	60
180	65	60
200	70	60
220	75	60
240	80	60
260	85	60
280	85	60
300	85	60
320	85	60

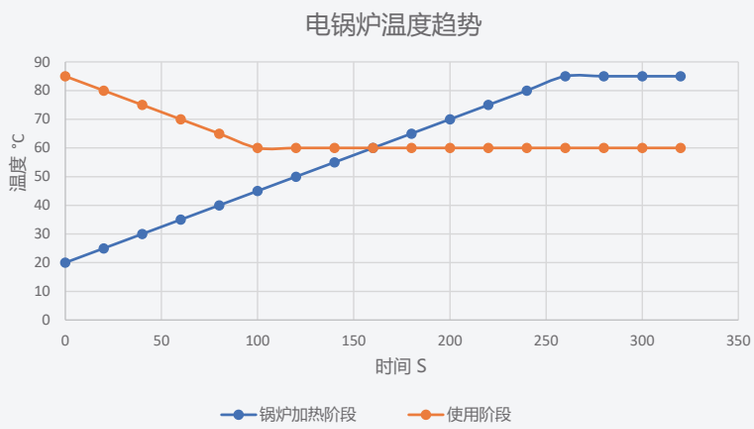

尺寸 / DIMENSIONS

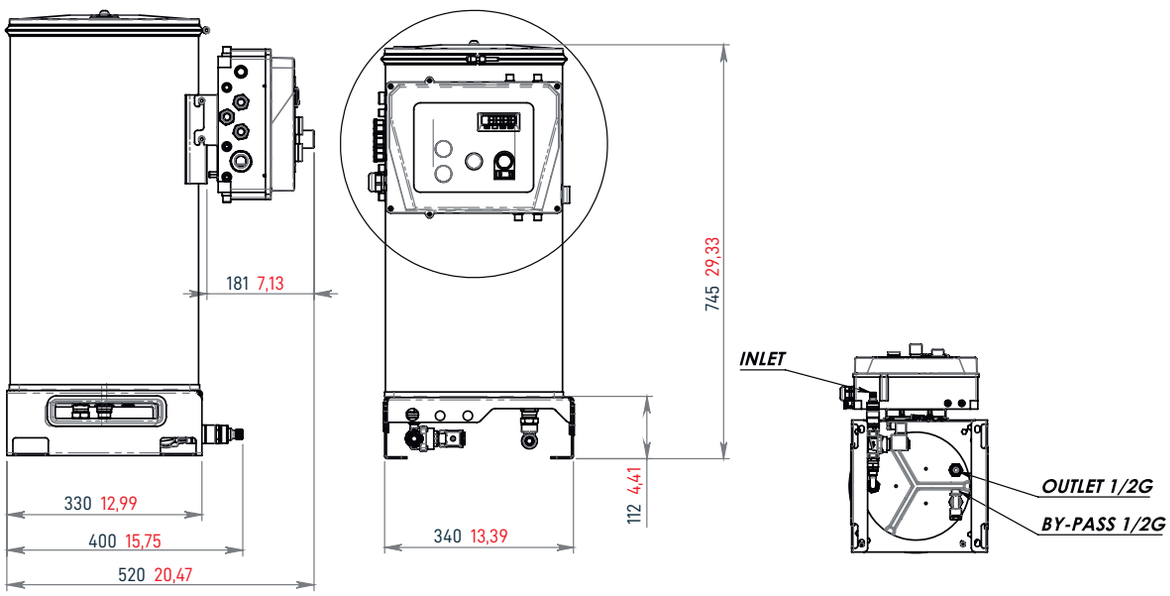

热水器
HEATERS

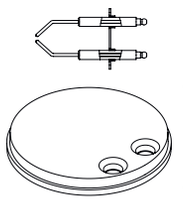
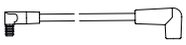
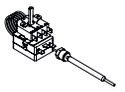
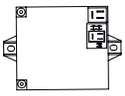
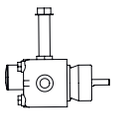
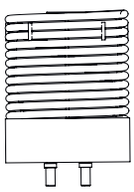

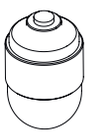

代码 Code	描述 Description	柴油热水器 / DIESEL HEATERS 小 SMALL	中 MEDIUM	大 BIG	超大MAXI	燃气热水器 / GAS HEATERS 小 SMALL	中 MEDIUM	大 BIG
2.032.04.004	柴油机电极 / *Diesel electrodes*	✔	✔	✔	✔			
2.032.04.006	甲烷/液化石油气感应电极 / *Methane/LPG sensing electrode*					✔	✔	✔
2.032.04.007	甲烷/液化气点火电极 / *Methane/LPG ignition electrode*					✔	✔	✔
1.094.04.005	电极绝缘体 / *Insulator*	✔	✔			✔	✔	
1.094.04.013	电极绝缘体 / *Insulator*			✔	✔			✔
2.020.04.035	电极电缆 12V-24V-230V / *Electrodes Cable 12V-24V-230V*	✔	✔	✔	✔			
2.020.04.012	电极电缆 400V / *Electrodes Cable 400V*	✔	✔					
2.020.04.075	电极电缆 400V / *Electrodes Cable 400V*			✔				
2.020.04.104	燃气机电极电缆点火 / *Electrodes Cable Gas Switch on*					✔	✔	✔
2.020.04.103	燃气机电极电缆 / *Electrodes Cable Gas*					✔	✔	✔
4.031.04.003	恒温器 / *Thermostat*	✔	✔	✔	✔	✔	✔	✔
4.030.04.007	变压器 12V / *Transformer 12V*	✔	✔	✔	✔			
4.030.04.010	变压器 230V / *Transformer 230V*	✔	✔	✔				
4.030.04.022	变压器 230V / *Transformer 230V*				✔			
4.030.04.016	变压器 24V / *Transformer 24V*	✔	✔	✔	✔			
4.030.04.001	变压器 400V / *Transformer 400V*	✔	✔	✔	✔			
2.030.04.003	柴油泵 230/*400V/12/24V / Diesel pump 230/400V/12/24V*			✔				
2.030.04.007	柴油泵 230 - 400V / *Diesel pump 230 - 400V*	✔	✔					
2.030.04.008	柴油泵 12 - 24V / *Diesel pump 12 - 24V*	✔	✔					
2.030.04.009	柴油泵 230 - 400V / *Diesel pump 230 - 400V*				✔			
2.030.04.005	柴油泵 12V - 24V / *Diesel pump 12V - 24V*				✔			
2.029.04.014	盘管 250 Bar / *Coil 250 Bar*	✔				✔		
2.029.04.008	盘管 250 Bar / *Coil 250 Bar*		✔				✔	
2.029.04.010	盘管 500 Bar / *Coil 500 Bar*			✔				✔
2.029.04.024	带定心环的盘管 250 Bar Coil with centering ring 250 Bar	✔				✔		
2.029.04.028	带定心环的盘管 350 Bar Coil with centering ring 350 Bar		✔				✔	
2.029.04.021	带定心环的盘管 250 Bar Coil with centering ring 250 Bar			✔				✔
2.029.04.022	带定心环的盘管 250 Bar Coil with centering ring 250 Bar				✔			
1.098.02.001	柴油泵联轴器 / *Diesel pump coupling*	✔	✔	12/24V	12/24V			
1.098.04.004	柴油泵联轴器 / *Diesel pump coupling*			230/400V	230/400V			
3.040.04.002	蓄能器 300 Bar / *Accumulator 300 Bar*	✔	✔	✔	✔	✔	✔	✔
3.040.04.003	不锈钢蓄能器 250 Bar / *Accumulator 250 Bar INOX*	✔	✔	✔	✔	✔	✔	✔

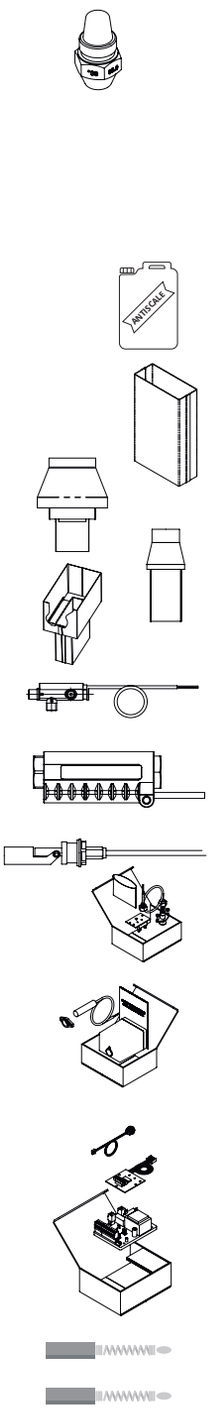

代码 Code	描述 Description	柴油热水器 / DIESEL HEATERS				燃气热水器 / GAS HEATERS		
		小 SMALL	中 MEDIUM	大 BIG	超大MAXI	小 SMALL	中 MEDIUM	大 BIG
3.040.04.005	蓄能器 250 Bar / *Accumulator 250 Bar*	✔	✔	✔	✔	✔	✔	✔
4.027.14.007	喷嘴 / *Nozzle 0.60 USGH 60° 9/16 UNEF*							
4.027.14.004	喷嘴 / *Nozzle 1 USGH 60° 9/16 UNEF*							
4.027.14.005	喷嘴 / *Nozzle 1.25 USGH 60° 9/16 UNEF*	✔						
4.027.14.002	喷嘴 / *Nozzle 1.50 USGH 60° 9/16 UNEF*							
4.027.14.015	喷嘴 / *Nozzle 1.65 USGH 60° 9/16 UNEF*							
4.027.14.011	喷嘴 / *Nozzle 2 USGH 60° 9/16 UNEF 20L*		✔					
4.027.14.012	喷嘴 / *Nozzle 2.25 USGH 60° 9/16 UNEF 25L*		✔					
4.027.14.018	喷嘴 / *Nozzle 2.5 USGH 60° 9/16 UNEF*			✔				
4.027.14.022	喷嘴 / *Nozzle 3.5 USGH 60° 9/16 UNEF*				✔			
3.060.04.001	除垢液 25L / *Antiscale liquid 25L*	✔	✔	✔	✔	✔	✔	✔
4.085.04.001T	除垢液 1L / *Antiscale liquid 1L*	✔	✔	✔	✔	✔	✔	✔
1.018.02.006	L103xW55xH190mm 烟囱 / *CHIMNEY EXTENTION Wind Protection*	✔	✔			✔	✔	
1.018.02.007	L74xW74xH150mm 烟囱 / *CHIMNEY EXTENTION Wind Protection*	✔	✔			✔	✔	
1.018.02.008	L138xW54xH230mm 烟囱 / *CHIMNEY EXTENTION Wind Protection*	✔	✔			✔	✔	
2.012.02.001	防雨 / *RAIN PROTECTION*	✔	✔	✔	✔	✔	✔	✔
3.037.02.006	H240mm ø 197 烟囱带抽风 / *CHIMNEY EXTENTION Venturi*			✔				✔
3.037.02.002	H416mm ø 123 烟囱带抽风 / *CHIMNEY EXTENTION Venturi*	✔	✔			✔	✔	
3.037.02.007	L194xW109xH375mm 烟囱 / *CHIMNEY EXTENTION Wind Protection*			✔				✔
3.054.04.002	水流开关 3\8"-1\4" | WATER FLOW SWITCH	✔	✔			✔	✔	✔
3.054.04.003	带感应器的水流开关 FL7 3\8"G-FF | WATER FLOW SWITCH			✔				✔
3.054.04.004	不锈钢水流开关 FL7 50MPA | WATER FLOW SWITCH				✔			
3.030.02.007	燃料水平开关 | FUEL LEVEL SWITCH	✔	✔	✔	✔			
9.022.02.001	MAZZONI 220V E 400V "魔眼" 火焰控制传感器 "Magic Eye" Flame control sensor 220V/*400V*	✔	✔	✔	✔			
9.021.02.003	KIT 12V BRAHMA 火焰控制 / *12V KIT FLAME CONTROL BRAHMA*	✔	✔	✔	✔			
9.021.02.004	KIT 24V BRAHMA 火焰控制 / *24V KIT FLAME CONTROL BRAHMA*	✔	✔	✔	✔			
9.021.02.005	KIT 220V BRAHMA 火焰控制 / *220V KIT FLAME CONTROL BRAHMA*	✔	✔	✔	✔			
	火焰控制套件随附完整的组装说明。必须在挡板法兰上钻孔来完成安装。 *The flame control kits are supplied complete with assembly instructions. To mount them, it will be necessary to drill the baffle flange.*							
9.021.04.020	热水器和火箱的电子板更换套件 12/24V / *REPLACEMENT KIT ELECTRONIC CARD FOR BOILER AND FIREBOX 12/24V*	✔	✔	✔	✔			
9.021.04.022	热水器和火箱的电子板更换套件 230V / *REPLACEMENT KIT ELECTRONIC CARD FOR BOILER AND FIREBOX 230V*	✔	✔	✔	✔			
9.021.04.021	热水器和火箱的电子板更换套件 400V / *REPLACEMENT KIT ELECTRONIC CARD FOR BOILER AND FIREBOX 400V*	✔	✔	✔	✔			
9.SPZ3012	马达刷 12V-24V / *MOTOR BRUSHES 12V-24V*	✔	✔					
9.SPZ3011	马达刷 12V-24V / *MOTOR BRUSHES 12V-24V*			✔	✔			

FIREBOX
DIESEL

流量 FLOW RATE	最高压力 MAX PRESSURE	最高进水温度 MAX INPUT WATER TEMPERATURE
15 - 30 l/min **3.9 - 7.9 gal/min**	**500 Bar** **7251.89 Psi**	**150°C** ***302° F***

30 Lt
7.9 Gal

15 - 21 - 25 Lt
3.9 - 5.5 - 6.6 Gal

性能和柴油消耗量 / *PERFORMANCES AND CONSUMPTION*

LT	*GAL*	KCAL/H	BTU	KW	KG/H
15	*3.9*	50.000	198.000	53.5	4.73
21	*5.2*	80.000	317.000	93	7.56
25	*6.6*	90.000	357.000	105	8.5
30	*7.9*	110.000	436.000	128	9.45

Mazzoni S.r.l. - Via Prati Vecchi 5 - 4025 Cavriago (RE) - Italy | www.e-mazzoni.it | info@e-mazzoni.it

FIREBOX
DIESEL

代码 Code	Bar	Psi	L/min	Gpm	盘管 / Coil m	盘管 / Coil ft	导管 / Pipe 厚度 / Thickness	导管 / Pipe ø	油喷嘴 Diesel Nozzle	电磁阀 Electrovalve	电机 Motor Volts-Hz	净重 Net weight Kg	净重 Net weight Lbs
3.064.04.009	250	3625.94	15	3.9	24	78.74	2.3	3/8"	16	12V DC	400V (50)	57	125.66
3.064.04.003	250	3625.94	15	3.9	24	78.74	2.3	3/8"	16	24V DC	220V(50)	57	125.66
3.064.04.002	250	3625.94	15	3.9	24	78.74	2.3	3/8"	16	230V AC	24V	58	127.86
3.064.04.005	250	3625.94	21	5.5	35	78.74	2.6	3/8"	16	12V DC	12V	58	127.86
3.064.04.007	250	3625.94	21	5.5	35	114.82	2.6	3/8"	16	24V DC	400V (50)	59	130
3.064.04.004	250	3625.94	21	5.5	35	114.82	2.6	3/8"	16	230V AC	220V (50)	59	130
3.064.04.010	250	3625.94	25	6.6	35	114.82	2.6	3/8"	16	12V DC	220V (60)	59	130
3.064.04.008	250	3625.94	25	6.6	35	114.82	2.6	3/8"	16	24V DC	24V	58	127.86
3.064.04.006	250	3625.94	25	6.6	35	114.82	2.6	3/8"	16	230V AC	12V	58	127.86
3.064.04.014	350	5076.32	25	6.6	35	114.82	2.6	3/8"	16	12V DC	220V (50)	59	130
3.064.04.015	350	5076.32	25	6.6	35	114.82	2.6	3/8"	16	230V AC	24V	58	127.86
3.064.04.016	500	7251,89	25	6.6	35	114.82	3	3/8"	16	230V AC	12V	58	127.86
3.064.04.038	500	7251.89	30	7.9	38.5	126	3	3/8"	16		12V DC		
3.064.04.039	500	7251.89	30	7.9	38.5	126	3	3/8"	16		24V DC		
3.064.04.040	500	7251.89	30	7.9	38.5	126	3	3/8"	16		230V AC		

PACKAGING

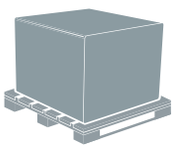

CAPACITY	每个托盘件数 PIECES EACH PALLET	厘米 / CM	INCH	KG	LBS
15-21-25	1	66 X 80 X 117	25.9 X 31.4 X 46.06	130,00	286.6
30	4	90 X 72 X 125	35.4 X 28.3 X 49.21	155,00	341.7

软管
HOSE REEL

高压软管
HIGH PRESSURE HOSE

枪头
GUNS

枪杆
LANCES

136	137	137	137

配件
ACCESSORIES

安全阀
SAFETY VALVES
138

溢流阀
BYPASS VALVES
138

高压喷嘴
HIGH PRESSURE NOZZLES
139

压力表
PRESSURE GAUGES
139

接头和过滤器
FITTINGS AND FILTERS
139

软管
HOSE REEL

提供的软管卷盘不自带高压软管 / *Hose reel supplied without high pressure hose*

3.048.04.007-1 - 小型软管卷盘 / ***SMALL HOSE REEL***

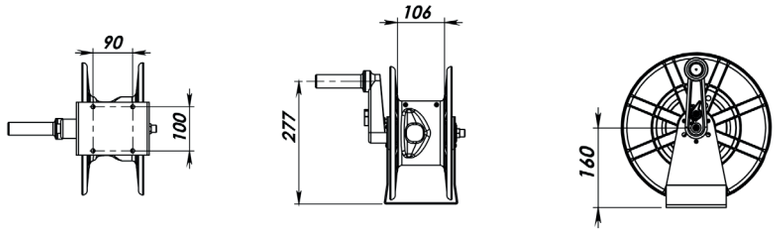

3.048.04.006-1 - 中型软管卷盘 / ***MEDIUM HOSE REEL***

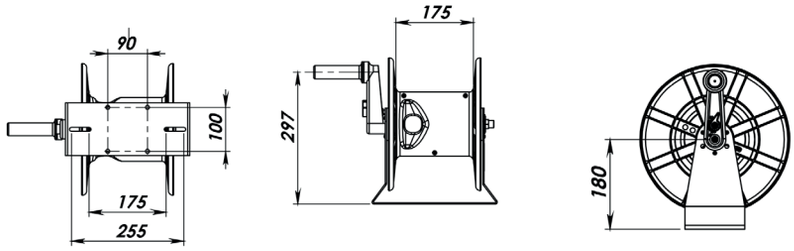

3.048.04.014-1 - 大型软管卷盘 / ***BIG HOSE REEL***

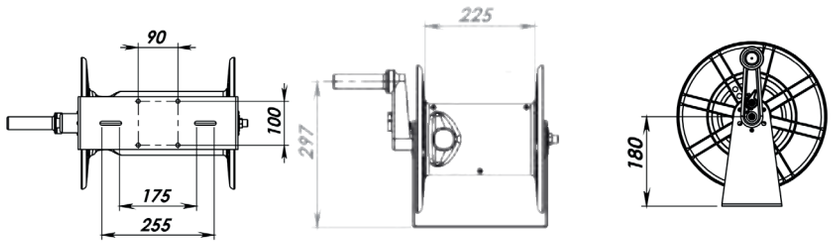

3.048.04.004-1 - 最大的软管卷盘 / ***MAXI HOSE REEL***

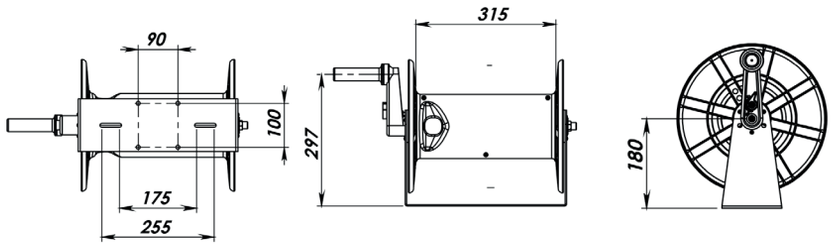

代码 *Code*	卷管 *Hose*	说明 *Description*
3.048.04.007-1	Max 10mt	3/8" M-M 软管 / *HOSE REEL 3/8"M-M*
3.048.04.006-1	Max 20mt	3/8" M-M 软管 / *HOSE REEL 3/8"M-M*
3.048.04.014-1	Max 30mt	3/8" M-M 软管 / *HOSE REEL 3/8"M-M*
3.048.04.004-1	Max 40mt	3/8" M-M 软管 / *HOSE REEL 3/8"M-M*

高压卷管
HIGH PRESSURE HOSES

代码 *Code*	说明 *Description*		连接 *Connection*
2.006.24.069	R2 - 5/16	10 mt	M22x1,5 – FØ14 G3/8-M
2.006.24.071	R2 - 5/16	20 mt	M22x1,5 – FØ14 G3/8-M
2.006.24.038	R2 - 3/8	10 mt.	M22x1,5 – FØ14 G3/8-M
2.006.24.045	R2 - 3/8	20 mt.	M22x1,5 – FØ14 G3/8-M

枪头 / *GUNS*

枪头
GUN

代码/*Code*	3.018.22.010
压力 / *Pressure*	500 Bar
流量 / *Flow rate*	30 l/min
进水 / In	G3/8" F
出水 / Out	G1/4" F

枪头带把手
GUN WITH EXTENSION

代码/*Code*	3.021.22.007	3.021.22.008
压力 / *Pressure*	280 Bar	310 Bar
流量 / *Flow rate*	30 l/min	40 l/min
进水 / In	SW G3/8" F	SW G3/8" F
出水 / Out	M22x1.5 - F Ø 14	M22x1.5 - F Ø 14

没有喷嘴的枪杆
LANCES WITHOUT NOZZLES

代码 *Code*	长度 *Lenght*	进水 IN	出水 OUT
3.022.12.007	700 mm	1/4"GAS - M	1/4"NPT-F
3.022.12.008	900 mm	1/4"GAS - M	1/4"NPT-F
3.022.12.009	1200 mm	1/4"GAS - M	1/4"NPT-F
3.022.12.010	1500 mm	1/4"GAS - M	1/4"NPT-F
3.022.12.011	1700 mm	1/4"GAS - M	1/4"NPT-F
3.022.12.012	2000 mm	1/4"GAS - M	1/4"NPT-F
3.022.12.034	700 mm	M 22X1.5 M	1/4"NPT-F

四功能头
4 FUNCTION HEAD

代码 *Code*	长度 *Lenght*	进水 IN	出水 OUT
3.020.22.034	500 mm	M22 x1,5 mm	1/4"NPT-F

可调节头
ADJUSTABLE HEAD

代码 *Code*	长度 *Lenght*	进水 IN	出水 OUT
3.020.22.021	500 mm	M22x1.5 mm	1/4"NPT-F
3.020.22.043	700 mm	M22x1.5 mm	1/4"NPT-F

旋转喷嘴枪杆
TURBO NOZZLE LANCES

代码 *Code*	枪杆 *Lance*	喷嘴 *Nozzle*	进口尺寸 *Inlet*
3.020.22.036	inox /s.steel	Ø30	M22 x 1,5 (M)
3.020.22.030	inox /s.steel	Ø40	M22 x 1,5 (M)
3.020.22.033	inox /s.steel	Ø45	M22 x 1,5 (M)
3.020.22.032	inox /s.steel	Ø50	M22 x 1,5 (M)
3.020.22.061	inox /s.steel	Ø55	M22 x 1,5 (M)
3.020.22.037	inox /s.steel	Ø60	M22 x 1,5 (M)
3.020.22.055	inox /s.steel	Ø65	M22 x 1,5 (M)
3.020.22.062	inox /s.steel	Ø70	M22 x 1,5 (M)
3.020.22.056	inox /s.steel	Ø75	M22 x 1,5 (M)
3.020.22.053	inox /s.steel	Ø80	M22 x 1,5 (M)
3.020.22.060	inox /s.steel	Ø100	M22 x 1,5 (M)

按需定制其他尺寸
OTHER SIZE ON DEMAND

阀门
VALVES

安全阀 / *SAFETY VALVES*

代码 / *Code*	3.003.22.002	3.003.22.005	3.003.22.006	3.003.22.007	3.003.24.002	3.003.24.007
压力 / *Pressure*	300 Bar - 4350 Psi	300 Bar - 4350 Psi	400 Bar - 5800 Psi	400 Bar - 5800 Psi	560 Bar - 8100 Psi	250 Bar - 3625 Psi
流量/ *Flow rate*	Max: 40 l/min	Max: 40 l/min	Max: 40 l/min	Max: 40 l/min	Max: 100 l/min	Max: 100 l/min
进水 / IN	3/8" GAS F	3/8" GAS M	3/8" GAS F	3/8" GAS M	G1/2" F	G1/2" F
出水 / OUT	3/8" GAS F/F	3/8" GAS M	3/8" GAS F	3/8" GAS M	G1/2" F	G1/2" F
溢流口 / BY PASS	Ø 12	Ø 12	Ø 12	Ø 12	G1/2" F	G1/2" F

溢流阀 / *BY PASS VALVES*

代码 *Code*	3.003.12.004	3.003.12.017	3.003.14.017	3.008.12.054	3.008.12.055	3.003.12.024	3.003.12.028	3.003.12.029
压力 *Pressure*	150 - 250 Bar 3650 psi max	150-250 Bar 3650 psi max	700 Bar 10150 psi	150 - 250 Bar 3650 psi max	150 - 250 Bar 3650 psi max	250 Bar 3650 psi	250 Bar 3650 psi	300 Bar 4351 psi
流量 *Flow rate*	Max: 35 l/min	Max: 35 l/min	Max: 80 l/min	Max: 35 l/min	Max: 35 l/min	Max: 35 l/min	Max: 35 l/min	Max: 35 l/min
压力表口 *Gauge port*	G 1/4" F	G 1/4" F	G 1/4" F	G 1/4" F	G 1/4" F	G 1/4" F	G 1/4" F	G 1/4" F
进水 *In*	3/8" GAS F/F	3/8" GAS F/F	G 1/2" F	G 3/8" F	3/8" GAS F/F	3/8" GAS F/F	3/8" GAS F/F	G 3/8"
出水 *Out*	3/8" GAS F/F	3/8" GAS F/F	G 1/2" F	M22 x 1.5M	M22 x 1.5M	3/8" GAS F/F	3/8" GAS F/F	G 3/8"
出水 *By pass*	G 3/8" F	G 3/8" F	G 1/2" F	G 3/8" F	G 3/8" F	G 3/8" F	G 3/8" F	G 3/8" F
压力开关 *Pressure Switch*	✗	✗	✗	✗	✓	✓	✓	✗
喷油器 *Injector*	✗	✗	✗	✓	✓	✗	✗	✗

配有高温密封件
With seals for high temperature

旋钮颜色 / *SPRING COLOR*

旋钮 / *SPRING COLOR*	BAR	PSI
黄 / *YELLOW*	**120**	**1740**
红 / *RED*	**170**	**2465**
蓝 / *BLUE*	**200**	**2900**
白色 / *WHITE*	**300**	**4351**

按需定制其他流量和压力 / *Other flow rates or pressures on demand*

不锈钢高压喷嘴
HIGH PRESSURE NOZZLES STAINLESS STEEL

代码 *Code*	Ø	接头尺寸 *Connections*
4.027.02.028	1504	1/4"NPT
4.027.02.029	2504	1/4" NPT
4.027.02.034	15045	1/4" NPT
4.027.02.035	25045	1/4" NPT
4.027.02.007	1505	1/4" NPT
4.027.02.001	2505	1/4" NPT
4.027.02.040	15055	1/4" NPT
4.027.02.005	25055	1/4" NPT
4.027.02.044	1506	1/4" NPT
4.027.02.045	2506	1/4" NPT
4.027.02.050	15065	1/4" NPT
4.027.02.051	25065	1/4" NPT
4.027.02.056	1507	1/4" NPT
4.027.02.057	2507	1/4" NPT
4.027.02.070	15075	1/4" NPT
4.027.02.071	25075	1/4" NPT
4.027.02.073	1508	1/4" NPT
4.027.02.074	2508	1/4" NPT
4.027.02.080	1510	1/4" NPT

按需定制其他流量和压力
OTHER SIZE ON DEMAND

压力表 / *PRESSURE GAUGES*

代码 *Code*	连接方式 *Connection*		Ø	压力 *Pressure*
4.020.04.001	径向连接 *Radial*	G 1/4	63	400 Bar
4.020.04.005	径向连接 *Radial*	G 1/4	63	600 Bar
4.020.04.006	径向连接 *Radial*	G 1/4	40	300 Bar

代码 *Code*	连接方式 *Connection*		Ø	压力 *Pressure*
4.020.14.002	前置连接 *Frontal*	G 1/4	50	400 Bar
4.020.14.019	前置连接 *Frontal*	G 1/4	70	1000 Bar

快换联轴器和接头
QUICK RELEASE COUPLING AND FITTING

快换塑料接头 **1/2"**
PLASTIC QUICK CONNECTION 1/2"

代码/*Code* 3.012.12.001

快换塑料接头 **3/4"**
PLASTIC QUICK CONNECTION 3/4"

代码/*Code* 3.012.12.010

过滤器 / *FILTERS*

带网和盐的外部过滤器
EXTERNAL FILTER WITH IMPURITY NET AND SALT 3/4"GAS

代码/*Code* 3.032.04.007

带网和盐的外部过滤器
EXTERNAL FILTER WITH IMPURITY NET AND SALT 3/4"GAS

代码/*Code* 3.032.04.002

磁性钢过滤器
MAGNETIC ANTISCALE IN STEEL 3/4"G

代码/*Code* 3.032.02.008

在线过滤器
G1/2F 50SH 40L/MIN
IN-LINE FILTER G1/2F 50SH 40L/MIN

代码/*Code* 3.032.02.004

黄铜过滤器 **"Y"**
3/4"G-FF
BRASS FILTER "Y" 3/4"G-FF

代码/*Code* 3.032.02.005

喷嘴规格
NOZZLES TABLE

BAR	50	60	70	80	90	100	110	120	130	140	150	160	170	180	190	200	220	240	250	280	300	320	350
Ø																							
02	3.3	3.6	3.8	4.1	4.4	4.6	4.8	5.0	5.2	5.4	5.6	5.8	6.0	6.2	6.3	6.5	6.8	7.1	7.3	7.7	8.0	8.2	8.6
03	4.8	5.3	5.7	6.1	6.5	6.8	7.1	7.4	7.8	8.0	8.3	8.6	8.9	9.1	9.4	9.6	10.1	10.5	10.8	11.4	11.8	12.2	12.7
04	6.4	7.0	7.6	8.1	8.6	9.1	9.5	10.0	10.4	10.8	11.1	11.5	11.9	12.2	12.5	12.9	13.5	14.1	14.4	15.2	15.8	16.3	17.0
045	7.3	8.0	8.6	9.2	9.8	10.3	10.8	11.3	11.7	12.2	12.6	13.0	13.4	13.8	14.2	14.6	15.3	16.0	16.3	17.2	17.8	18.4	19.3
05	8.1	8.8	9.5	10.2	10.8	11.4	12.0	12.5	13.0	13.5	14.0	14.4	14.9	15.3	15.7	16.1	16.9	17.7	18.0	19.1	19.7	20.4	21.3
055	8.8	9.7	10.5	11.2	11.9	12.5	13.1	13.7	14.3	14.8	15.3	15.8	16.3	16.8	17.2	17.7	18.5	19.4	19.8	20.9	21.7	22.4	23.4
06	9.7	10.6	11.5	12.3	13.0	13.7	14.4	15.0	15.6	16.2	16.8	17.3	17.9	18.4	18.9	19.4	20.3	21.2	21.7	22.9	23.7	24.5	25.6
065	10.5	11.5	12.4	13.2	14.0	14.8	15.5	16.2	16.9	17.5	18.1	18.7	19.3	19.9	20.4	20.9	22.0	22.9	23.4	24.8	25.6	26.5	27.7
07	11.3	12.4	13.4	14.3	15.2	16.0	16.8	17.5	18.2	18.9	19.6	20.2	20.9	21.5	22.1	22.6	23.7	24.8	25.3	26.8	27.7	28.6	29.9
075	12.1	13.2	14.3	15.3	16.2	17.1	17.9	18.7	19.5	20.2	20.9	21.6	22.3	22.9	23.6	24.2	25.4	26.5	27.0	28.6	29.6	30.6	32.0
08	12.9	14.1	15.2	16.3	17.3	18.2	19.1	19.9	20.8	21.5	22.3	23.0	23.7	24.4	25.1	25.7	27.0	28.2	28.8	30.5	31.5	32.6	34.0
085	13.7	15.0	16.2	17.4	18.4	19.4	20.3	21.3	22.1	23.0	23.8	24.5	25.3	26.0	26.7	27.4	28.8	30.1	30.7	32.5	33.6	34.7	36.3
09	14.8	16.3	17.6	18.8	19.9	21.0	22.0	23.0	23.9	24.8	25.7	26.6	27.4	28.2	28.9	29.7	31.1	32.5	33.2	35.1	36.4	37.6	39.3
095	15.6	17.0	18.4	19.7	20.9	22.0	23.1	24.1	25.1	26.0	26.9	27.8	28.7	29.5	30.3	31.1	32.6	34.1	34.8	36.8	38.1	39.4	41.2
10	16.3	17.8	19.2	20.6	21.8	23.0	24.1	25.2	26.2	27.2	28.2	29.1	30.0	30.9	31.7	32.5	34.1	35.6	36.4	38.5	39.8	41.1	43.0
11	17.7	19.4	20.9	22.4	23.7	25.0	26.2	27.4	28.5	29.6	30.6	31.6	32.6	33.5	34.5	35.4	37.1	38.7	39.5	41.8	43.3	44.7	46.8
115	18.4	20.1	21.8	23.3	24.7	26.0	27.3	28.5	29.6	30.8	31.8	32.9	33.9	34.9	35.8	36.8	38.6	40.3	41.1	43.5	45.0	46.5	48.6
12	19.1	20.9	22.6	24.1	25.6	27.0	28.3	29.6	30.8	31.9	33.1	34.2	35.2	36.2	37.2	38.2	40.0	41.8	42.7	45.2	46.8	48.3	50.5
125	19.8	21.7	23.4	25.0	26.6	28.8	29.4	30.7	31.9	33.1	34.3	35.4	36.5	37.6	38.6	39.6	41.5	43.4	44.3	46.9	48.5	50.1	52.4
13	21.2	23.2	25.1	26.8	28.5	30.0	31.5	32.9	34.2	35.5	36.7	37.9	39.1	40.2	41.4	42.4	44.5	46.5	47.4	50.2	52.0	53.7	56.1
14	22.6	24.8	26.8	28.6	30.4	32.0	33.6	35.1	36.5	37.9	39.2	40.5	41.7	42.9	44.1	45.3	47.5	49.6	50.6	53.5	55.4	57.2	59.9
15	24.0	26.3	28.4	30.4	32.3	34.0	35.7	37.2	38.8	40.2	41.6	43.0	44.3	45.6	46.9	48.1	50.4	52.7	53.8	56.9	58.9	60.8	63.6
16	25.5	27.9	30.1	32.2	34.2	36.0	37.8	39.4	41.0	42.6	44.1	45.5	46.9	48.3	49.6	50.9	53.4	55.8	56.9	60.2	62.4	64.4	67.3
18	29.0	31.8	34.3	36.7	38.9	41.0	43.0	44.9	46.7	48.5	50.2	51.9	53.5	55.0	56.5	58.0	60.8	63.5	64.8	68.6	71.0	73.3	76.7
20	32.5	35.6	38.5	41.1	43.6	46.0	48.2	50.4	52.4	54.4	56.3	58.2	60.0	61.7	63.4	65.1	68.2	71.3	72.7	77.0	79.7	82.3	86.1
25	40.3	44.2	47.7	51.0	54.1	57.0	59.8	62.4	65.01	67.4	69.8	72.1	74.3	76.5	78.6	80.6	84.5	88.3	90.1	95.4	98.7	102	106.6

L/min

BAR	360	370	380	390	400	410	420	430	440	450	460	470	480	490	500
Ø															
02	8,7	8,8	9,0	9,1	9,2	9,3	9,4	9,5	9,6	9,8	9,9	10,0	10,1	10,2	10,3
03	12,9	13,1	13,3	13,4	13,6	13,8	13,9	14,1	14,3	14,4	14,6	14,7	14,9	15,1	15,2
04	17,3	17,5	17,7	18,0	18,2	18,4	18,6	18,9	19,1	19,3	19,5	19,7	19,9	20,1	20,3
045	19,5	19,8	20,1	20,3	20,6	20,9	21,1	21,4	21,6	21,8	22,1	22,3	22,6	22,8	23,0
05	21,6	21,9	22,2	22,5	22,8	23,1	23,4	23,6	23,9	24,2	24,5	24,7	25,0	25,2	25,5
055	23,7	24,0	24,4	24,7	25,0	25,3	25,6	25,9	26,2	26,5	26,8	27,1	27,4	27,7	28,0
06	26,0	26,4	26,7	27,1	27,4	27,7	28,1	28,4	28,7	29,1	29,4	29,7	30,0	30,3	30,6
065	28,1	28,5	28,9	29,2	29,6	30,0	30,3	30,7	31,0	31,4	31,7	32,1	32,4	32,8	33,1
07	30,4	30,8	31,2	31,6	32,0	32,4	32,8	33,2	33,6	33,9	34,3	34,7	35,1	35,4	35,8
075	32,4	32,9	33,3	33,8	34,2	34,6	35,0	35,5	35,9	36,3	36,7	37,1	37,5	37,9	38,2
08	34,5	35,0	35,5	35,9	36,4	36,9	37,3	37,7	38,2	38,6	39,0	39,5	39,9	40,3	40,7
085	36,8	37,3	37,8	38,3	38,8	39,3	39,8	40,2	40,7	41,2	41,6	42,1	42,5	42,9	43,4
09	39,8	40,4	40,9	41,5	42,0	42,5	43,0	43,5	44,0	44,5	45,0	45,5	46,0	46,5	47,0
095	41,7	42,3	42,9	43,4	44,0	44,5	45,1	45,6	46,1	46,7	47,2	47,7	48,2	48,7	49,2
10	43,6	44,2	44,8	45,4	46,0	46,6	47,1	47,7	48,2	48,8	49,3	49,9	50,4	50,9	51,4
11	47,4	48,1	48,7	49,4	50,0	50,6	51,2	51,8	52,4	53,0	53,6	54,2	54,8	55,3	55,9
115	49,3	50,0	50,7	51,3	52,0	52,6	53,3	53,9	54,5	55,2	55,8	56,4	57,0	57,6	58,1
12	51,2	51,9	52,6	53,3	54,0	54,7	55,3	56,0	56,6	57,3	57,9	58,5	59,2	59,8	60,4
125	53,1	53,9	54,6	55,3	56,0	56,7	57,4	58,1	58,7	59,4	60,1	60,7	61,3	62,0	62,6
13	56,9	57,7	58,5	59,2	60,0	60,7	61,5	62,2	62,9	63,6	64,3	65,0	65,7	66,4	67,1
14	60,7	61,6	62,4	63,2	64,0	64,8	65,6	66,4	67,1	67,9	68,6	69,4	70,1	70,8	71,6
15	64,5	65,4	66,3	67,1	68,0	68,8	69,7	70,5	71,3	72,1	72,9	73,7	74,5	75,3	76
16	68,3	69,2	70,2	71,1	72,0	72,9	73,8	74,7	75,5	76,4	77,2	78,0	78,9	79,7	80,5
18	77,8	78,9	79,9	81,0	82,0	83,0	84,0	85,0	86,0	87,0	87,9	88,9	89,8	90,8	91,7
20	87,3	88,5	89,7	90,8	92,0	93,1	94,3	95,4	96,5	97,6	98,7	99,7	100,8	101,8	102,9
25	108,1	109,6	111,1	112,6	114,0	115,4	116,8	118,2	119,6	120,9	122,3	123,6	124,9	126,2	127,5

L/min

销售条款
CONDITIONS OF SALES

销售条款

1）订单：当接到客户订单后， MAZZONI 保留拒接该订单的权利，并在收到订单的3天内和客户书面沟通。如果订单通过Mazzoni的代理商，工厂代表或业务员递交，也必须通过Mazzoni公司书面确认后才能生效。

2）价格：价格为现金支付，不含增值税， 不含买方需支付的关税以及其他有可能产生的税收和费用，即使在合同履行期间，Mazzoni s.r.l. 也保留更改价格的权利。

3）交货期限：订单中指明的交货期限是指合同结束的期限，应理解为是从工厂装运货物的日期。发货日期仅供参考，对卖方不具有约束力，尤其是由于不可抗力而导致的延迟。 假设Mazzoni s.r.l. 无法遵守发货日期，会在第一时间告知客户。订单履行中的任何延误均不赋予买方任何赔偿，罚款或其他权利。

4）运输：出厂价含包装费用，但不包括运输和保险费用。将货物从Mazzoni S.r.l运送到客户仓库所产生的一切成本和风险均由买方承担。 由运输公司运输的货物, 买家只可以对在运输公司的货运清单上有记录的损坏或者丢失的货物进行调查并申请索赔。因此在签货运单据之前，请检查货物是否有损坏，并确认收到的货物数量，在运单上记录任何损坏或差异。签署运单后：将其与工厂的交货单据上的内容进行比较检查，如有必要，请致电：（+39 0522 575156）要求提供交货单复印件； 如果有任何损坏或差异，请通过电子邮件通知我们：info@e-mazzoni.it。仅在2个工作日内通过电子邮件报告的损坏和差异，才能进行调查。请在邮件里附上我们公司的交货单复印件和您的姓名。

5）索赔和投诉：买方有责任在收到货物后立即验货。货物到达目的地的8天后，没有任何投诉，将被视为完成收货。与货物质量有关的任何投诉，请在收货日起的八天内以书面形式发电子邮件至info @ emazzoni。it。 如果涉及只能通过使用产品才可以被发现的质量问题，请在收货日起的三十天内提出书面投诉（以运输单据为证）。如果您的投诉被视为有效，Mazzoni s.r.l..将负责更换或维修零件，Mazzoni s.r.l.不接受任何其他的赔偿形式，运输费用客户自理。对于因运输造成的任何延误或损坏的投诉，必须在货物交付时向承运方提交，在运单原件上予以记录并及时告知Mazzoni s.r.l.。

6）退货：未经协商和书面授权，Mazzoni s.r.l. 不接受退货。 在接受退货的情况下， 退货的运输单据上，必须非常详尽说明退货原因。 如果是订购错误，在货物尚未使用， 包装完好无损并由买方承担风险的情况下可以退运，退运货物的退运金额比发票净价减少7%。 Mazzoni s.r.l. .的货代公司无权收取货物和受理投诉。

7）保修：Mazzoni产品保修期为自发货之日起12个月。保修包括免费更换有缺陷的零件。Mazzoni s.r.l..对于因安装和使用不当，故意破坏，自然灾害或战争行为，正常损耗，使用和应用中的经验不足或能力有限而造成的间接损坏不承担任何责任。保修范围不包括被未经授权的公司进行的篡改，修理或修改的组件。如果产品问题源于之前预见的原因之一，公司明确保留以下权利：检查和评估问题的性质，并向客户收取相关费用（请参阅用户手册）。待修理或更换的组件的运输由买方承担。对于非Mazzoni 生产的组件，我们只能参考供应商的保修条款。

8）安装和测试： Mazzoni s.r.l.销售设备和组件的安装以及相关的电气和液压连接均由买方负责。如果需要Mazzoni s.r.l.专业技术人员进行设备初始运行测试，必须在订购产品时于公司达成此服务协议并另行收费。

9）责任：Mazzoni s.r.l..的产品完全符合现行国际法规的条款。对于因使用或安装不当，维护不当，使用不合适的燃料或不符合标准的电力，篡改，破坏，或在任何情况下均不归因于工程和制造缺陷或损坏，而造成的人员伤害或财产损失，Mazzoni s.r.l. 不承担任何责任。

10）所有权：客户在付清全部货款前，Mazzoni s.r.l. 公司保留产品的所有权，公司严格执行全款到账后发货的规定。

11）付款方式：客户必须按照发票信息付款给Mazzoni s.r.l.. 如果未指定付款方式，客户可以用汇票或银行转账，并向公司提供付款凭证。除了这些方式，客户必须在Mazzoni s.r.l. 总部支付全部金额。如果延迟付款，Mazzoni s.r.l. 将收取4%的利息。

12）保留所有权： 根据民法第1523条，在买方向卖方完成支付全额协议价格之前，待销售的货物完全属于卖方的专有财产。

13）特点：此目录表中说明的技术特征对制造商不具有约束力。Mazzoni s.r.l. 保留在不通知客户的情况下，对其认为适当的产品进行更改的权利，也无权接受买方的投诉或要求。

14）仲裁条款：因合同解释或执行而引起的所有争议，仲裁权限将交给（Reggio Emilia）雷焦艾米利亚法院。

15）网上价格：关于网站和网络平台（例如Ebay，阿里巴巴，亚马逊等），网上可见价格必须不低于公司传达的标价。同样对于网上促销，折扣价格不得低于标价。网上价格的输入必须在输入5天内通知Mazzoni s.r.l.，以供参考。

16）最终售价：终端用户的实际售价不得低于目录表价格减去15%的折扣。

Conditions of sales 1) **Orders**. While the order undersigned by the client is binding, Mazzoni its reserves the faculty to non accept it, giving written communication to the client within 3 days from the reception of the order. The orders taken through Mazzoni s.r.l. agents, representatives or salesmen are always subject to the unobjectionable discretion of the same Mazzoni s.r.l. Consequently, the above-mentioned orders shall be considered binding onlyafter a written confirmation of the order is drawn up by Mazzoni s.r.l. 2) **Prices**. Prices are intended for cash payment, without V.A.T. and possible expenses for taxes and duties always and entirely paid by the Buyer even if applied during the performance of the contract. The prices may be subject at any time to variations on the part of Mazzoni.

3) **Delivery**. The delivery term expressly indicated in the order and set at the closing of the contract is understood as terms of shipment of the goods from the factory. The date of shipment is understood as approximate ad is not binding with respect to the Vendor, in particular, for delays caused by acts of God. If the company Mazzoni s.r.l. is not in condition to respect it, it will give communication to the client. Any delays in the processing of orders do not give rise to the Purchaser's right to compensation, penalties or other rights.

4) **Transport**. Ex-works, packaging included. Transport and insurance costs are not included in the price list. Every cost and risk deriving from the transport of the goods from Mazzoni to the customer's warehouse is born by the latter. For goods shipped by carrier: claims for damaged or missing goods can only be investigated when recorded on carrier's note. Before signing carrier's note check for any damage; check number of packages received and record any damages or discrepancies on the carrier's note. After signing carrier's note: check all items against enclosed delivery note; Telephone: (+39 0522 575156) for copy of delivery note if necessary; notify us by e-mail : info@e-mazzoni.it of any damages or discrepancies. Damages and discrepancies can only be investigated if reported by e-mail info@e-mazzoni.it , writing within 2 working days. Please include a copy of our delivery note and your name.

5) **Claims and complaints** - The buyer is responsible for checking the goods immediately after having received them. The goods will be considered fully accepted after 8 (eight) days from their arrival to destination. Any claims related to the quality of the goods, under penalty of lapse, must be sent in writing to e-mail info@emazzoni. it to Mazzoni s.r.l., within 8 (eight) days from the date of acceptance of the same goods. In case of claims related to running defects, and which can be verified only by operating the product, the conditions for presenting the written claim are within 30 (thirty) days from the date of acceptance of the goods (the document of shipment will bear witness). In case the claim is accepted as valid, Mazzoni s.r.l. will be responsible solely for replacing or repairing the parts, while any other form of indemnity and tranport costs are excluded. Claims for any delays or damages caused by the shipping must be addressed to the carrier, upon delivery of the goods, making a written reserve on the same document of shipment which must then be notified immediately, in copy, to Mazzoni s.r.l.

6) **Reshipment of goods**. Mazzoni S.r.l. does not accept the return of goods without its previous preventive and written authorization. On the document of transport for the return it has always to be mentioned in exhaustive way the reason of the return. In case of wrong order, goods can be returned without shipment charges and at the Buyer's risk only if perfectly complete, packed and not used. In any case will be effected a 7% reduction on net price shown on invoice.

7) **Guarantee**. Mazzoni's products are guaranteed for the duration of 12 months given off date of shipment. The guarantee consists in the free substitution of parts that result defectives. Mazzoni s.r.l. is not responsible of consequential defects by improper installation, incorrect use, vandal damages, natural catastrophes or action of war, normal deterioration, inexperience or incompetence in the use and application. The guarantee does not cover tampering defects, reparations or changes made by non-authorized firms. The company has the faculty to value the nature of the problem and to charge the intervention of restoration costs to the client, if the defect has origin from one of the causes foreseen before.(see user manual). The transport for the components to be repared or replaced are at charge of the buyer. For components not produced from Mazzoni warranty us limited to the one recognised from its suppliers.

8) **Installation and test** - Installation of the equipment and spare parts marketed by Mazzoni s.r.l. and the related electric and water hook-ups will be charged to the Buyer. Any operations on the part of a Mazzoni s.r.l. qualified technician for the equipment's initial running test, has to be discussed at the moment of the order and will be billed separately.

9) **Responsibility**. The responsibility of the product is the one foreseen by the international normative. Mazzoni is not responsible for damages to people or things originated from improper use or installation, bad maintenance, use of non fit fuels, use of electrical power, tampering or sabotage, or defects non attributable to the engineering or manufacturing to the product.

10) **Property**. Our company reserves the ownership of the products since the integral payment of the price. The goods will have to remain in the delivery place since the integral payment.

11) **Payment**. The payment of the invoices has to be effected to Mazzoni s.r.l. If not specified the company is authorized to issue draft or bank receipt. The non-payment of that forces the client to make the whole payment to Mazzoni s.r.l.. In case of delay of payment Mazzoni s.r.l. will apply the interests increased of 4%.

12) **Retention of title**. The object of the sale goods remain the exclusive property of the seller until full payment of the agreed price as required by art. 1523 of the Civil Code.

13) **Specifications**. Technical specifications indicated in the present pricelist are not binding on the manufacturer. Mazzoni s.r.l. reserves the right do make changes to the products that are considered as appropriate, without notice and without giving rise to the right to compensation or claims on the part of the purchaser.

14) **Arbitration cause**. Every controversy started from the interpretation or from the execution of the contract will be devolved to the competence of the Court of Reggio Emilia.

15) **Online price.** Regarding websites and web platforms (eg Ebay, Alibaba, Amazon etc.), the visible price online must be not less than the list price communicated by the company. Also with regard to online promotions, the discounted price must not be lower than the price list. The inclusion of prices online must be communicated to the manufacturer, for information, within 5 days of insertion.

16) **Selling price.** The actual selling price to the end user must not be less than price list minus 15% discount.

WeChat

Alibaba Group

MAZZONI

(+39) 351 677 1750

chinadesk@e-mazzoni.it